DLS

SCHMIERSYSTEME

// CONCEPTION

// CONSTRUCTION

// INSTALLATION AND ASSEMBLY

Table of contents

Grease Lubrication
FlexxPump 125 & FlexxPump 125 DLS 8
FlexxPump 125 B 10
FlexxPump 250 DLS 12
FlexxPump 250 14
FlexxPump 250 B 16
FlexxPump 400 20
FlexxPump 400 B 22
FlexxPump 1500 DLS 24
PU-Lubrication pinions 30
Mounting-axis 34
PU-Lubrication roll 38
Splitter 42
Progressiv distributor 44
Progressiv distributor with circulation monitoring 46
Tube connectors, straight 50
Tube connectors, right-angled 52
Tube connectors with non-return valve 54
Connections & Reductions 55
Connections 56
Tube connectors stainless steel 57
DLS-Lubricants 59
Brackets for FlexxPump 125 & Splitter 74
Brackets for FlexxPump 125 & progressiv distributor 75
Brackets for FlexxPump 400 76
Accessories FlexxPump 125 B & 400 B 86
Accessories FlexxPump 125, 400 & 1500 24 V DC 87
Tubes 88

Sets
FlexxPump 125 & Splitter 78
FlexxPump 125 & progressiv distributor 79
PU-Lubrication Pinion with axis, straight 80
PU-Lubrication Pinion with axis, right-angled 81
PU-Lubrication Pinion RH with axis, straight 82
PU-Lubrication Pinion RH with axis, right-angled 83
PU-Lubrication Pinion LH with axis, straight 84
PU-Lubrication Pinion LH with axis, right-angled 85

Oil lubrication
FlexxPump 125 & FlexxPump 125 DLS 96
FlexxPump 500 DLS 98
FlexxPump 500 100
FlexxPump 500 B 102
FlexxPump 2000 104
PU-Lubrication Sprocket simplex 108
- with axis 108
- with spring steel 109
PU-Lubrication Sprocket duplex 111
- straight axis 111
- angled axis and spring steel 112
- angled axis and double spring steel 113
PU-Lubrication Sprocket triplex 114
- angled axis and spring steel 114
- angled axis and double spring steel 115
PU-Lubrication roll 116
Splitter 120
Progressiv distributor 122
Progressiv distributor with circulation monitoring 124
Tube connector with non-return valve 126
Tube 127
Oil OE1 128
Oil OE3 129
Brackets for FlexxPump 125 & Splitter 132
Brackets for FlexxPump 125 & Progressiv distributor 133
Brackets for FlexxPump 500 134
Partner 138

DLS stands for ...

Reiner Hochholzer:

...Operational safety and durability!

Helmut Feicht:

...Customer orientation and service friendliness!

Contact: DLS Schmiersysteme GmbH
Gewerbering 5
D- 82140 Olching

Phone: +49 8142 650 690
E-Mail: mail@dls-schmiersysteme.de
Website: www.dls-schmiersysteme.de

IHK Ausbildungsbetrieb 2020

ISO 9001 Zertifiziertes Qualitätsmanagementsystem TÜV SÜD ISO 9001 www.tuev-sued.de/ms-zert

Our tribological solution is accurate tailored to your requirements:

You get lubrication systems for linear guides and ball screws, as well as for open gears and chain drives of all types and sizes.

We advise you personally to work out an optimal solution for your application.

During on on-site visit, we record the general conditions and create a lubrication concept tailored to the respective parameters, without obligation. We also determine the individual lubrication quantity requirements of the individual lubrication points.

We work closely with you to implement the lubrication concept. Subsequent modifications or changes are possible for us at any time!

As a full-range supplier, we provide to you innovative, electronically controlled grease and oil lubricators, as well as lubricating gears, lubrication sprockets and extensive system accessories from stock!

Ideal for original equipment in mechanical engineering as well for retrofitting existing systems.

Everything reliable, competent and solid from a single source.

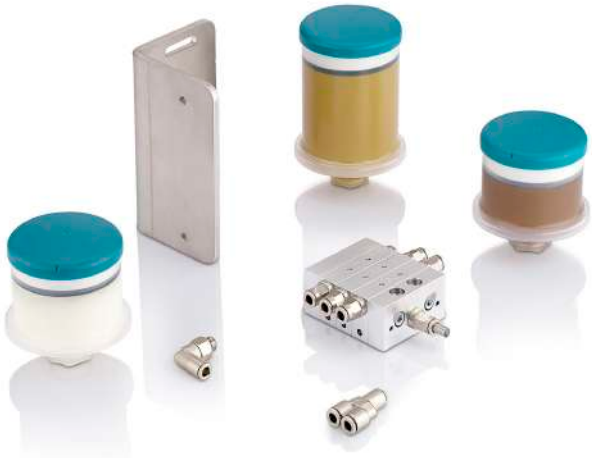

The FlexxPump

The basis of all good lubrications!

FlexxPump 125 & FlexxPump 125 DLS

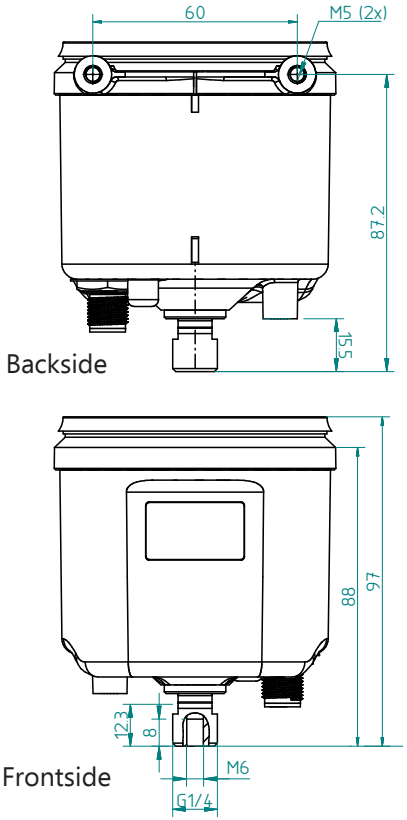

Note on delivery:
The FlexxPump 125 is vented with F02 grease upon delivery

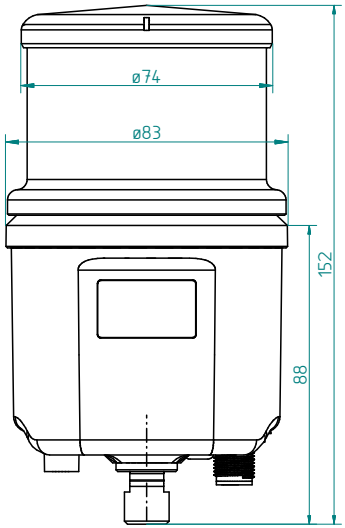

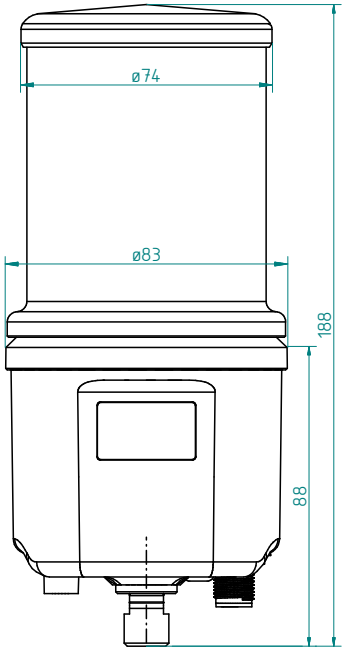

type	variant	type	outlets	double-pump bodies	lubrication points	cartridge size	M12x1 plug	part-no.
125	24 V DC time-controlled	125	1	1	max. 4* / 10**	125 cm^3	yes	135-125-100
250						250 cm^3		135-225-100
125 DLS	24 V DC pulse-controlled	125 DLS	1	1	max. 4* / 10**	125 cm^3	yes	135-125-210
250 DLS						250 cm^3		135-225-210

* when using distributors / splitter

** when using distributors more lubrication points are possible!

Controlled minimum quantity lubrication for grease 24V DC

function:	piston pump
lubricant volume:	125 / 250 cc (in cartridge)
volume per stroke:	0,15 cc per outlet
number of pump strokes per cartridge 125 / 250 cc:	ca. 780 / 1560
operating pressure:	50 bar
lubricant:	grease, up to NLGI class 2, solid particles possible
operating temperatur:	-10°C ... +60°C
number of outlets:	1
thread outlet:	G1/4"(a) and M6(i)
operating voltage:	24 V DC (via cable)
connector:	M12 x 1, 4-pole
current consumption 24 V DC:	Imax. 350 mA
assembly:	Backside M5(i) (2x) or downside M5(i) with G1/4"(a) or DLS accessories
mounting position:	vertical, cartridge up
control:	integrated microelectronic SPS (#135-125-210)
running-time:	1 till max. 36 months (time-controlled)
max. amount per cycle:	max. 1,50 cc
pressure monitoring:	integrated, electronic
level monitoring:	integrated, electronic
error message:	optical LCD and SPS
error acknowledgment:	(#135-125-210) SPS
filling function:	available
protection class:	IP 54
housing material:	PA 6.6-GF 30 / POM

Ideal for single or combined relubrication of:

+ roller bearing
+ racks / open gears
+ linear guides
+ ball swivel connector
+ ball screw

FlexxPump 125 B

Backside

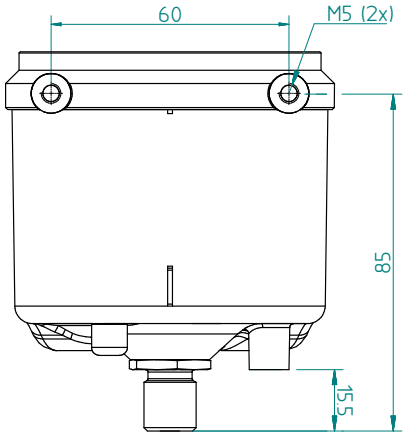

Frontside

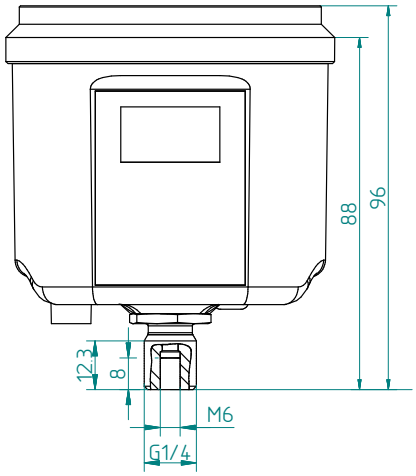

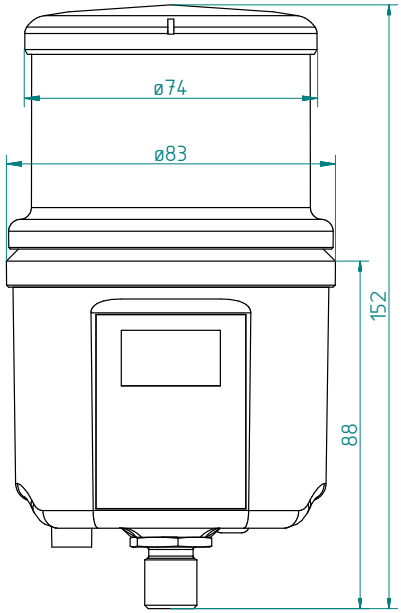

Note on delivery:
The FlexxPump 125 is vented with F02 grease upon delivery

type	variant	type	outlets	double-pump bodies	lubrication points	different lubrica-tion amounts	part-no.
125 B	battery time-controlled	125 B	1	1	max 4* / 10**	1	135-125-000

* when using distributors / splitter

** when using distributors more lubrication points are possible!

Battery not included! Please order seperatly with part-no.: 134-002-25!

Controlled minimum quantity lubrication for grease, battery operated

function:	piston pump
lubricant volume:	125 cc (in cartridge)
volume per stroke:	0,15 cc per outlet
number of pump strokes per cartridge 125 cc:	ca. 780
operating pressure:	35 bar
lubricant:	till NLGI class 2, solid particles possible
operating temperatur:	-10°C ...+60°C
number of outlets:	1
thread outlet:	G1/4"(a) and M6(i)
operating voltage:	4,5 V DC
assembly:	Backside M5(i) (2x) or downside M5(i) with G1/4"(a) or DLS accessories
mounting position:	vertical, cartridge up
control:	integrated, microelectronic
running-time:	1 till max. 24 months
max. amount per cycle:	max. 1,50 cc
pressure monitoring:	integrated, electronic
level monitoring:	integrated, electronic
error message:	optical LCD
protection class:	IP 54
housing material:	PA 6.6-GF 30 / POM

Ideal for single or combined relubrication of:

+ roller bearing
+ linear guides
+ ball screw
+ racks / open gears
+ ball swivel connector

FlexxPump 250 DLS

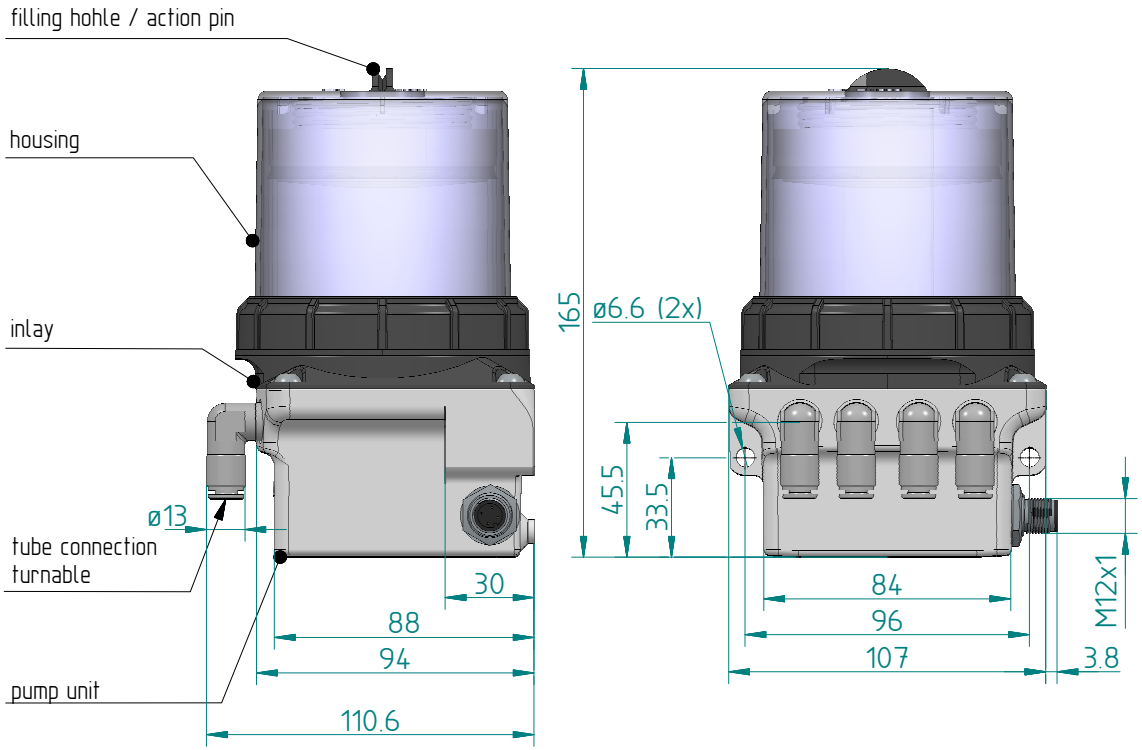

type	variant	outlets	double-pump bodies	lubrication points	lubrication amounts	part-no.
211 DLS	pulse-controlled	1	1	max. 4* / 10 **	1	235-211-210
212 DLS		2	1	max. 8* / 20**	1	235-212-210
222 DLS		2 (1+1)	2	max. 8* / 20**	2	235-222-210
223 DLS		3 (1+2)	2	max. 12* / 30**	2	235-223-210
224 DLS		4 (2+2)	2	max. 16* / 40**	2	235-224-210

* when using distributors / splitter
** when using distributors more lubrication points are possible!

Controlled minimum quantity lubrication for grease, 24 V DC pulse-controlled

function:	piston pump
lubricant volume:	grease, 250 cc (in cartridge)
volume per stroke:	0,15 cc per outlet
number of pump strokes per cartridge 250 cc:	ca. 1560
operating pressure:	70 bar
lubricant:	grease, up to NLGI class 2, solid particles possible
operating temperatur:	-10°C ... +60°C
number of outlets:	max. 4, right-angled, turnable
operating voltage:	24 V DC (via cable)
connector:	M12 x 1, 4-pole
current consumption 24 V DC:	Imax. 350 mA
mounting position:	arbitrary
control:	integrated, microelectronic
max. amount per cycle:	4,50 cc
pressure monitoring:	integrated, electronic
level monitoring:	integrated, reedcontact
error message:	SPS error message
optional:	angled plug with integrated LED (see accessories)
protection class:	IP 54
housing material:	zinc, polyamide

Ideal for single or combined relubrication of:

- + roller bearing
- + linear guides
- + ball screw
- + racks / open gears
- + ball swivel connector

FlexxPump 250

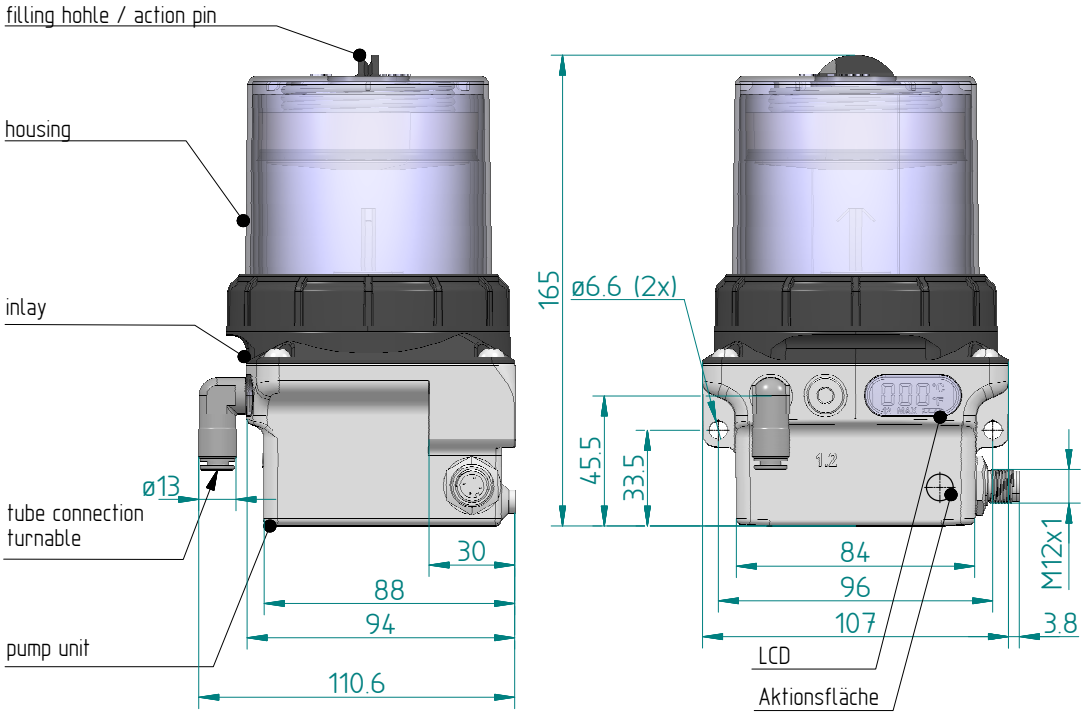

2 setting modes:

E_t = emptying time:	1 - 36 months	h = break time:	1 - 240 h
+ C:	1 - 30 cycles	+ C:	1 - 30 cycles

type	variant	outlets	double-pump bodies	lubrication points	lubrication amounts	part-no.
211 DLS	24 V DC time-controlled	1	1	max. 4* / 10 **	1	235-211-100
212 DLS		2	1	max. 8* / 20**	1	235-212-100

* when using distributors / splitter
** when using distributors more lubrication points are possible!

Controlled minimum quantity lubrication for grease, 24 V DC time-controlled

function:	piston pump
lubricant volume:	grease, 250 cc (in cartridge)
volume per stroke:	0,15 cc per outlet
number of pump strokes per cartridge 250 cc:	ca. 1560
operating pressure:	70 bar
lubricant:	grease, up to NLGI class 2, solid particles possible
operating temperatur:	-10°C ... +60°C
number of outlets:	max. 2, right-angled, turnable
operating voltage:	24 V DC (via cable)
connector:	M12 x 1, 4-pole
current consumption 24 V DC:	Imax. 350 mA
mounting position:	arbitrary
control:	integrated, microelectronic
running-time:	1 till max. 36 months
max. amount per cycle:	4,50 cc
pressure monitoring:	integrated, electronic
level monitoring:	integrated, reedcontact
error message:	optical LCD
optional:	angled plug with integrated LED (see accessories)
protection class:	IP 54
housing material:	zinc, polyamide

Ideal for single or combined relubrication of:

+ roller bearing
+ linear guides
+ ball screw
+ racks / open gears
+ ball swivel connector

FlexxPump 250 B

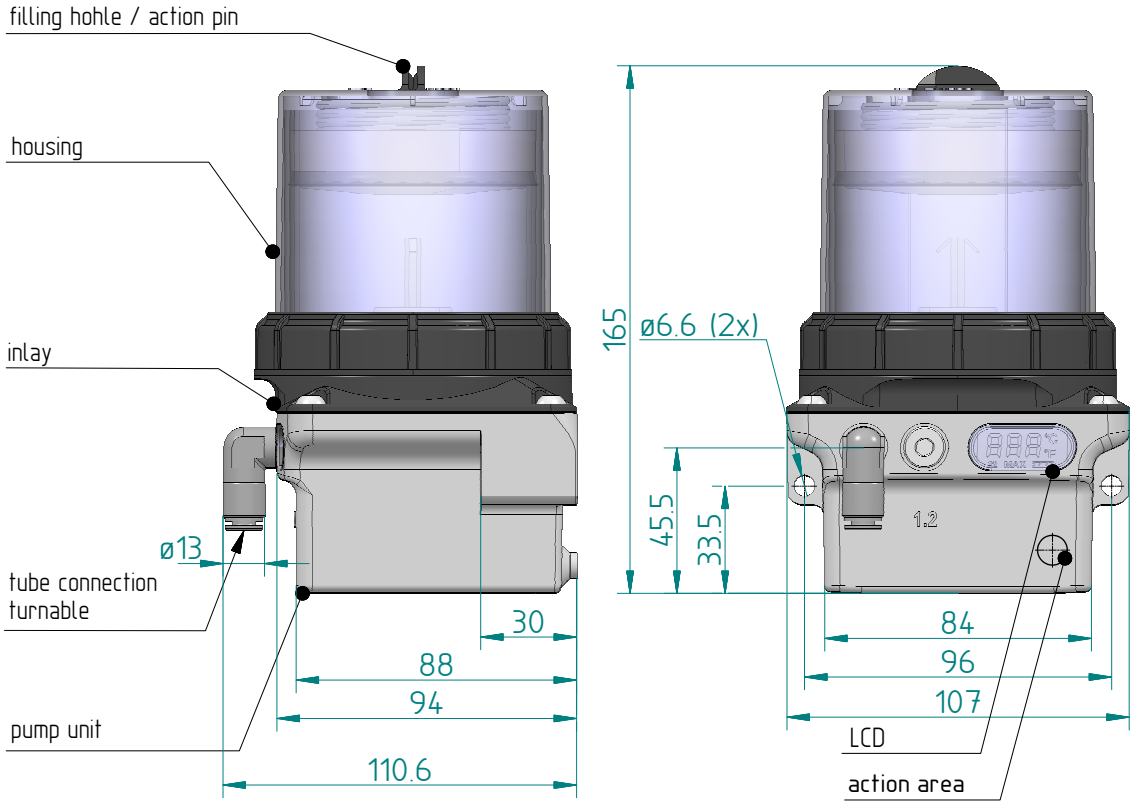

2 setting modes:

E_t = emptying time: 1 - 36 months
+ C: 1 - 30 cycles

h = break time: 1 - 240 h
+ C: 1 - 30 cycles

type	variant	outlets	double-pump bodies	lubrication points	lubrication amounts	part-no.
211 B	battery time-controlled	1	1	max. 4*	1	235-211-000
212 B		2	1	max 8*	1	235-212-000

* when using distributors / splitter
battery not included! Please also order with part no.: 134-002-024.

Controlled minimum quantity lubrication for grease, battery operated

function:	piston pump
lubricant volume:	grease, 250 cc (in cartridge)
volume per stroke:	0,15 cc per outlet
number of pump strokes per cartridge 400 cc:	ca. 1560
operating pressure:	50 bar
lubricant:	grease, up to NLGI class 2, solid particles possible
operating temperatur:	-10°C ... +60°C
number of outlets:	max. 2, right-angled, turnable
operating voltage:	6 V
mounting position:	arbitrary
control:	integrated, microelectronic
running-time:	1 till max. 36 months
max. amount per cycle:	4,50 cc
pressure monitoring:	integrated, electronic
level monitoring:	integrated, reedcontact
error message:	optical via LCD
protection class:	IP 54
housing material:	zinc, polyamide

Ideal for single or combined relubrication of:

+ roller bearing
+ linear guides
+ ball screw
+ racks / open gears
+ ball swivel connector

FlexxPump 400 DLS

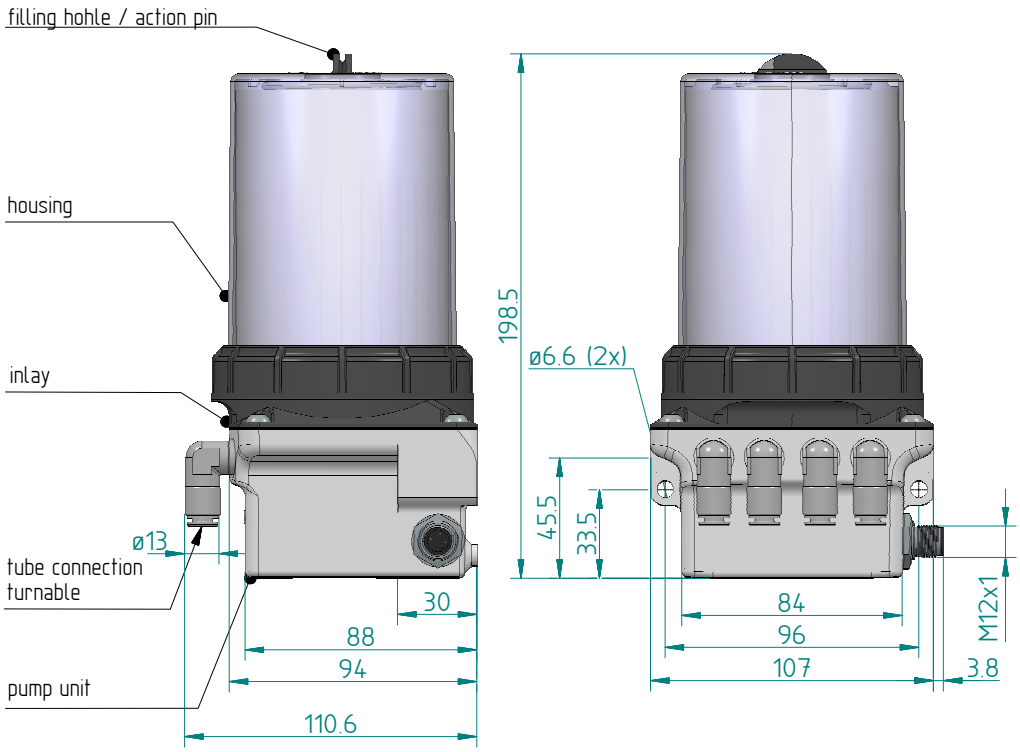

type	variant	outlets	double-pump bodies	lubrication points	lubrication amounts	part-no.
411 DLS	pulse-controlled	1	1	max. 4* / 10 **	1	235-411-210
412 DLS		2	1	max. 8* / 20**	1	235-412-210
422 DLS		2 (1+1)	2	max. 8* / 20**	2	235-422-210
423 DLS		3 (1+2)	2	max. 12* / 30**	2	235-423-210
424 DLS		4 (2+2)	2	max. 16* / 40**	2	235-424-210

* when using distributors / splitter
** when using distributors more lubrication points are possible!

Controlled minimum quantity lubrication for grease, pulse-controlled

function:	piston pump
lubricant volume:	grease, 400 cc (in cartridge)
volume per stroke:	0,15 cc per outlet
number of pump strokes per cartridge 400 cc:	ca. 2600
operating pressure:	70 bar
lubricant:	grease, up to NLGI class 2, solid particles possible
operating temperatur:	-10°C ... +60°C
number of outlets:	max. 4, right-angled, turnable
operating voltage:	24 V DC (via cable)
connector:	M12 x 1, 4-pole
current consumption 24 V DC:	Imax. 350 mA
mounting position:	arbitrary
control:	integrated, microelectronic
max. amount per cycle:	4,50 cc
pressure monitoring:	integrated, electronic
level monitoring:	integrated, reedcontact
error message:	SPS error message
optional:	angled plug with integrated LED (see accessories)
protection class:	IP 54
housing material:	zinc, polyamide

Ideal for single or combined relubrication of:

+ roller bearing
+ linear guides
+ ball screw
+ racks / open gears
+ ball swivel connector

FlexxPump 400

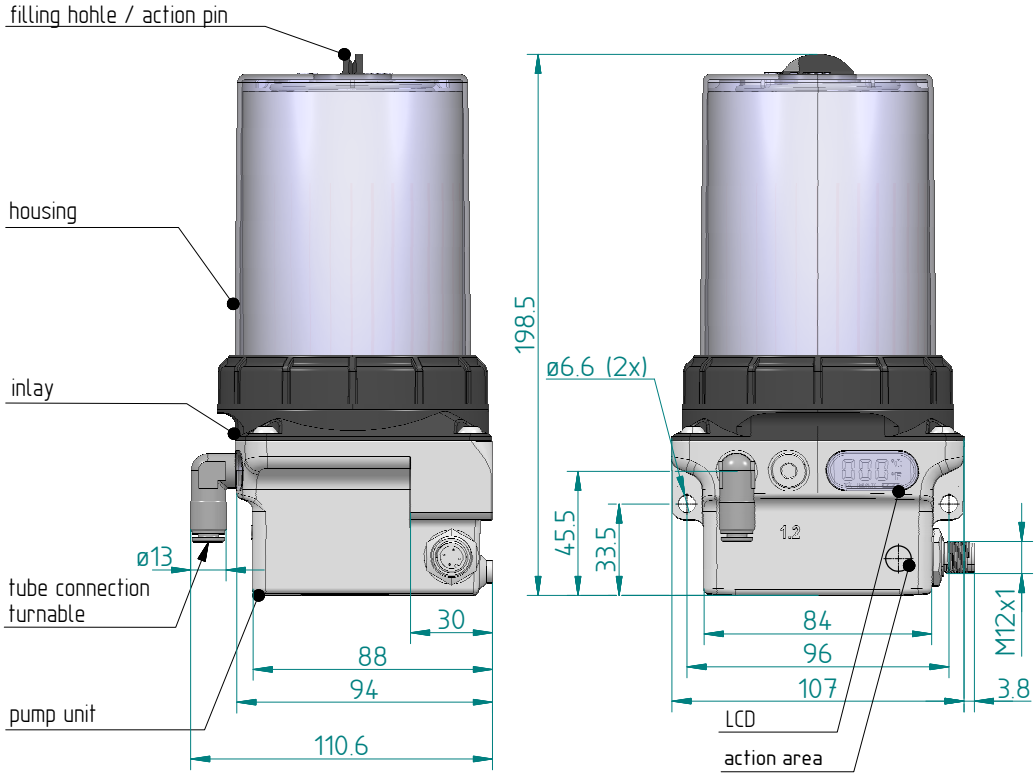

2 setting modes:

E_t = emptying time:	1 - 36 months	h = break time:	1 - 240 h
+ C:	1 - 30 cycles	+ C:	1 - 30 cycles

type	variant	outlets	double-pump bodies	lubrication points	lubrication amounts	part-no.
411	24 V DC time-controlled	1	1	max. 4* / 10 **	1	235-411-100
412		2	1	max. 8* / 20**	1	235-412-100

* when using distributors / splitter
** when using distributors more lubrication points are possible!

Controlled minimum quantity lubrication for grease, 24 V DC time-controlled

function:	piston pump
lubricant volume:	grease, 400 cc (in cartridge)
volume per stroke:	0,15 cc per outlet
number of pump strokes per cartridge 400 cc:	ca. 2600
operating pressure:	70 bar
lubricant:	grease, up to NLGI class 2, solid particles possible
operating temperatur:	-10°C ... +60 °C
number of outlets:	max. 2, right-angled, turnable
operating voltage:	24 V DC (via cable)
connector:	M12 x 1, 4-pole
current consumption 24 V DC:	Imax. 350 mA
mounting position:	arbitrary
control:	integrated, microelectronic
running-time:	1 till max. 36 months
max. amount per cycle:	4,50 cc
pressure monitoring:	integrated, electronic
level monitoring:	integrated, reedcontact
error message:	optical LCD
optional:	angled plug with integrated LED (see accessories)
protection class:	IP 54
housing material:	zinc, polyamide

Ideal for single or combined relubrication of:

+ roller bearing
+ linear guides
+ ball screw
+ racks / open gears
+ ball swivel connector

FlexxPump 400 B

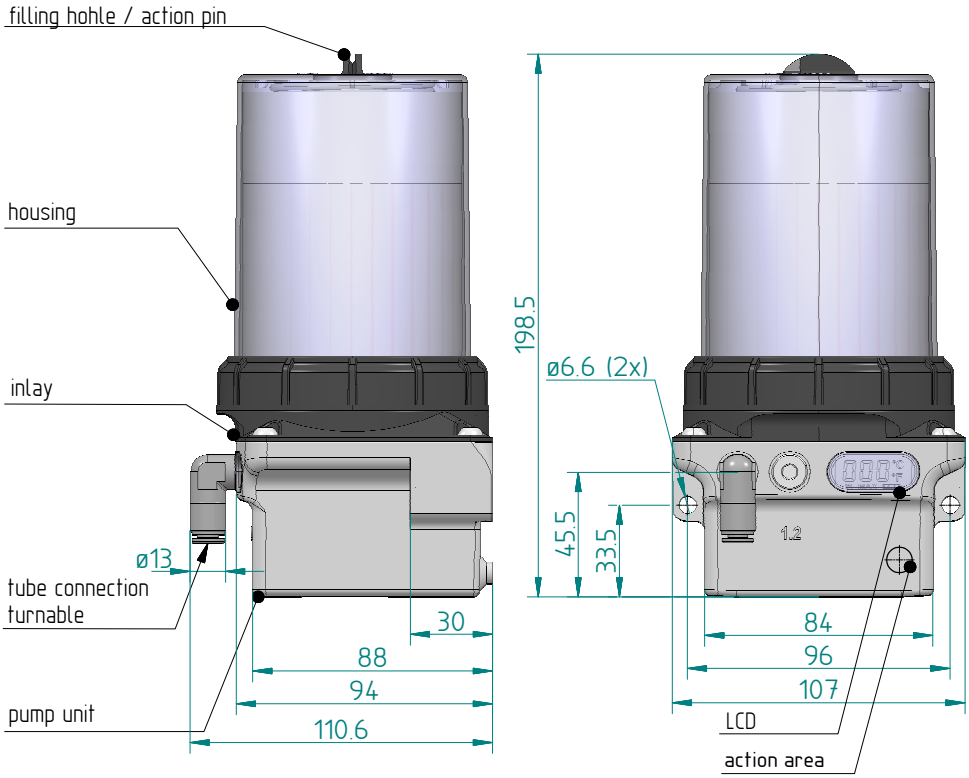

2 setting modes:

E_t = emptying time: 1 - 36 months
+ C: 1 - 30 cycles

h = break time: 1 - 240 h
+ C: 1 - 30 cycles

type	variant	outlets	double-pump bodies	lubrication points	lubrication amounts	part-no.
411 B	battery time-controlled	1	1	max. 4*	1	235-411-000
412 B		2	1	max 8*	1	235-412-000

* when using distributors / splitter
battery not included! Please also order with part no.: 134-002-024.

Controlled minimum quantity lubrication for grease, battery operated

function:	piston pump
lubricant volume:	grease, 400 cc (in cartridge)
volume per stroke:	0,15 cc per outlet
number of pump strokes per cartridge 400 cc:	ca. 2600
operating pressure:	50 bar
lubricant:	grease, up to NLGI class 2, solid particles possible
operating temperatur:	-10°C ...+60 °C
number of outlets:	max. 2, right-angled, turnable
operating voltage:	6 V
mounting position:	arbitrary
control:	integrated, microelectronic
running-time:	1 till max. 36 months
max. amount per cycle:	4,50 cc
pressure monitoring:	integrated, electronic
level monitoring:	integrated, reedcontact
error message:	optical via LCD
protection class:	IP 54
housing material:	zinc, polyamide

Ideal for single or combined relubrication of:

+ roller bearing
+ linear guides
+ ball screw
+ racks / open gears
+ ball swivel connector

FlexxPump 1500 DLS

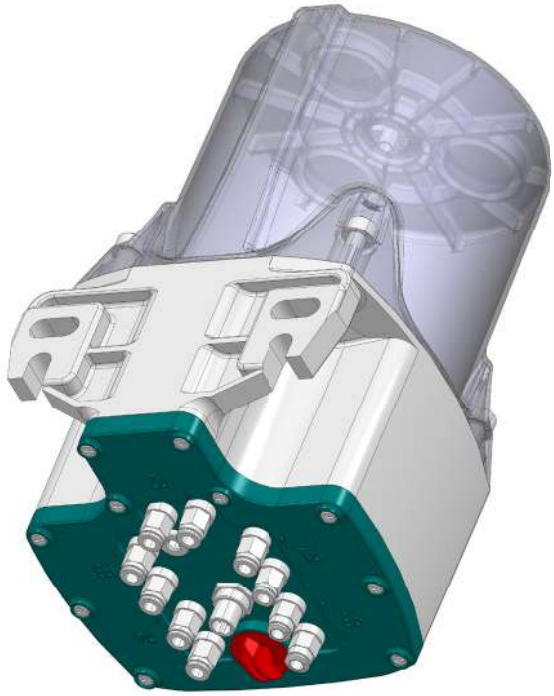

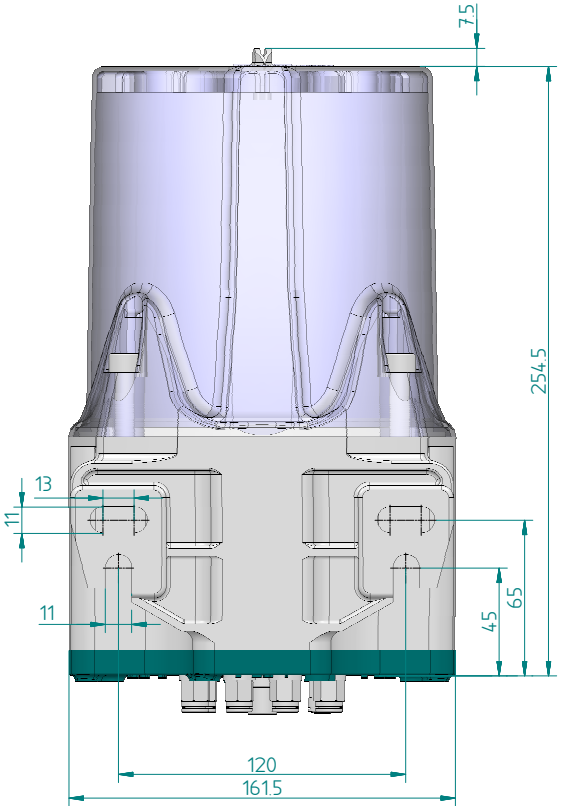

type	variant	outlets	double-pump bodies	lubrication amounts	monitoring & control via...	part-no.
1502 DLS	pulse-controlled time-controlled	2	1	1	SPS	540-202-100
1504 DLS		4	2	2	SPS	540-404-200
1506 DLS		6	3	3	SPS	540-606-300
1508 DLS		8	4	4	SPS	540-808-400
1510 DLS		10	5	5	SPS	541-010-500

Combination of outlets with Y-tube connectors (134-002-000) possible!

Controlled minimum quantity lubrication for grease, 24 V DC

function:	piston pump
lubricant volume:	grease, 1500 cc (in grease bellow)
volume per stroke:	0,15 cc per outlet
number of pump strokes:	ca. 9500
operating pressure:	70 bar
lubricant:	grease, up to NLGI class 2, solid particles possible
operating temperatur:	-10°C ... +60°C
number of outlets:	max. 10, straight
operating voltage:	24 V DC (via cable)
connector:	M12 x 1, 4-pole
current consumption 24 V DC:	Imax. 350 mA
mounting position:	vertical Abdeckung up
control:	integrated, microelectronic
running-time:	1 till max. 36 months
max. amount per cycle:	4,50 cc
pressure monitoring:	integrated, electronic
level monitoring:	integrated, reedcontact
error message:	pulse-controlled: SPS time-controlled: optical LCD
optional:	angled plug with integrated LED (see accessories)
protection class:	IP 54
housing material:	aluminum, polyamide

Ideal for single or combined relubrication of:

+ roller bearing
+ linear guides
+ ball screw
+ racks / open gears
+ ball swivel connector

The PU-lubrication Pinion

The lubrication pinions consist of an open-cell polyurethane foam
(temperature range -40 °C ... + 120 °C) and are composed of several segments.

For the selection, a constructive decision must be made as to whether the lubrication gear, the rack or the drive gear should be lubricated.

It is preferably attached to the drive gear.

The open-cell polyurethane foam material used for the lubrication gears ensures that the teeth are optimally supplied over a very long period of time.

The material stores the lubricant and releases it again in the smallest metered quantities.
Over-lubrication is avoided, as well as insufficient lubrication.

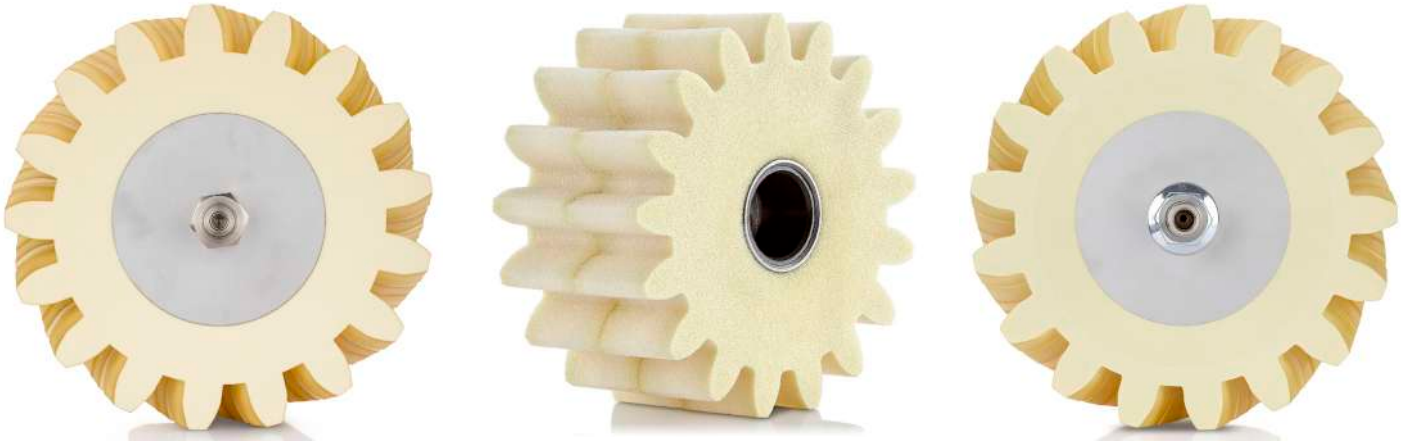

The PU-lubrication Pinion

Lubrication of open gear drives and racks

The teeth of open drives should preferably be relubricated automatically.

F01 only for open gears and rack and Pinion drives
F02 for open gears, rack and Pinion drives
and linear guides in food and Pharmaceutical sector (NSF)
F03 for open gears, rack and Pinion drives and linear guides

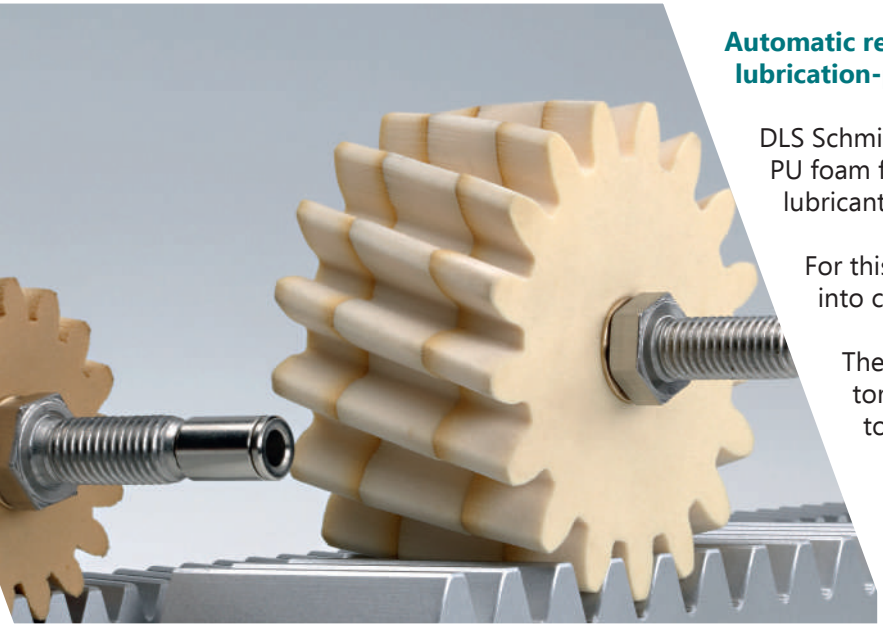

Automatic relubrication with polyurethane lubrication-pinions

DLS Schmiersysteme supplies lubrication gears made of PU foam for the automatic, continuous application of the lubricant.

For this purpose, a suitable lubrication gear is brought into contact with the drive gear or the rack.

The PU lubrication gear does not transmit any torque, but only transfers the lubricant to the toothing that is in contact.

The required relubrication quantities for different gears under different operating conditions can be found in the diagram below.

The prerequisite for the validity of the diagram is the use of the corresponding PU lubricating Pinion and a suitable gear lubricant such as F01, F02 or F03.

Before using for the first time, the PU lubrication pinions must be filled with a suitable lubricant.

The heart of every good lubrication!

Grease requirement when lubricating with PU-lubrication-pinions

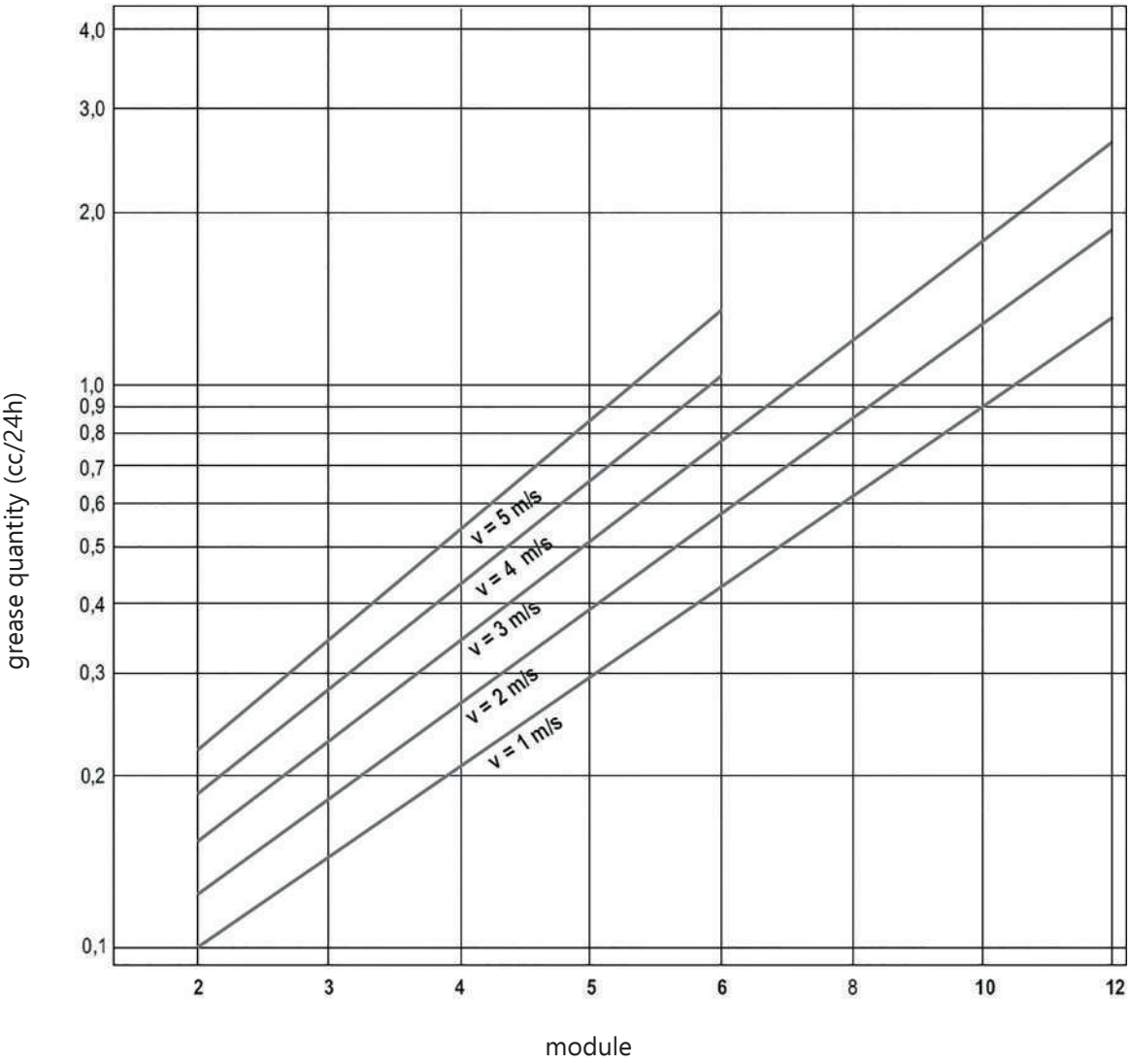

PU-Lubrication pinions

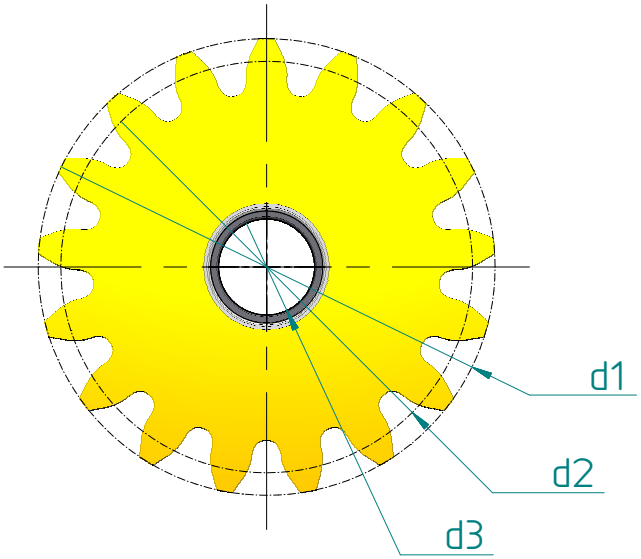

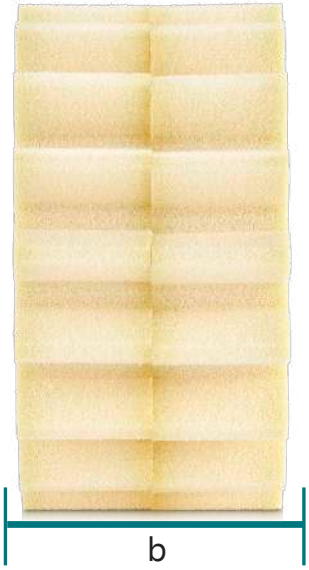

Description:
PU-Lubrication Pinion; straight;
incl. sleeve and plain bearing;
toothing after DIN 867

Material:
Lubrication Pinion: open-cell PU foam;
Sleeve: steel

Straight

module	z	b	d1	d2	d3	a	flanks	part-no.
1,5	24	15	41,2	38,2	12	20°	straight	130-015-024
2	17	20	40,1	36,1	12	20°	straight	130-020-017
3	17	30	60,1	54,1	12	20°	straight	130-030-017
4	17	40	80,2	72,2	12	20°	straight	130-040-017
5	17	50	100,2	90,2	20	20°	straight	130-050-017
6	17	60	120,2	108,2	20	20°	straight	130-060-017
8	17	80	160,3	144,3	20	20°	straight	130-080-017
10	17	100	200,4	180,4	20	20°	straight	130-100-017
12	8	120	125,9	101,9	20	20°	straight	130-120-008

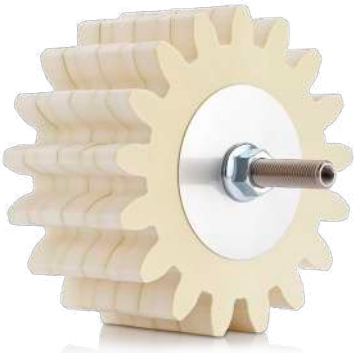

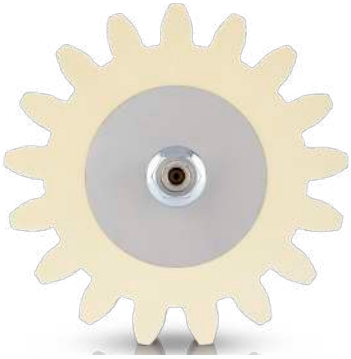

PU-Lubrication pinions

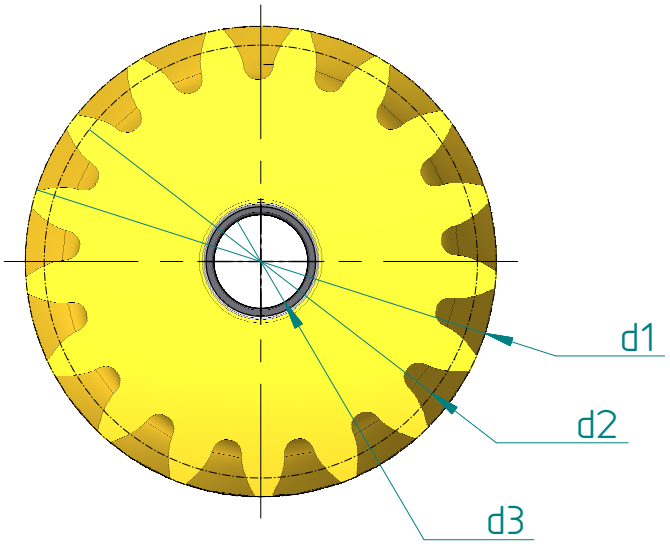

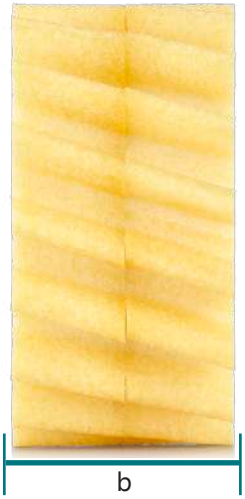

helical right

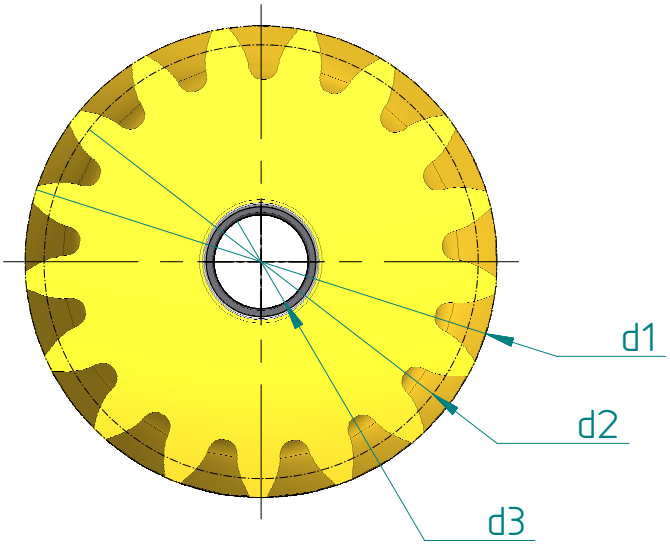

helical left

Helical right & left

module	z	b	d1	d2	d3	a	ß	flanks	part-no.
1,5	24	15	41,2	38,2	12	20°	19°31`42"	right	131-015-024
								left	132-015-024
2	17	20	40,1	36,1	12	20°	19°31`42"	right	131-020-017
								left	132-020-017
3	17	30	60,1	54,1	12	20°	19°31`42"	right	131-030-017
								left	132-030-017
4	17	40	80,2	72,2	12	20°	19°31`42"	right	131-040-017
								left	132-040-017
5	17	50	100,2	90,2	20	20°	19°31`42"	right	131-050-017
								left	132-050-017
6	17	60	120,2	108,2	20	20°	19°31`42"	right	131-060-017
								left	132-060-017
8	17	80	160,3	144,3	20	20°	19°31`42"	right	131-080-017
								left	132-080-017
10	17	100	200,4	180,4	20	20°	19°31`42"	right	131-100-017
								left	132-100-017
12	8	120	125,9	101,9	20	20°	19°31`42"	right	131-120-008
								left	132-120-008

Mounting-axis

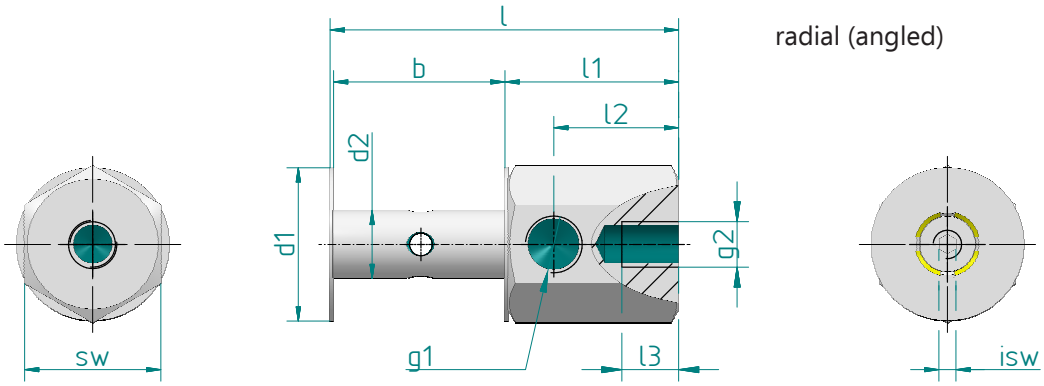

radial (angled)

Description:
Mounting-axis for
PU-Lubrication Pinion;

Material:
Steel, nickel-plated

module	b	l	l1	l2	d1	d2	g1	g2	l3	sw	isw	part-no.
1,5	15,2	46,4	30,6	22	27	12	G1/8x10mm	M8	10	24	3	133-015-001
2	20,2	51,4	30,6	22	27	12	G1/8x10mm	M8	10	24	3	133-020-001
3	30,2	61,4	30,6	22	27	12	G1/8x10mm	M8	10	24	3	133-030-001
4	40,2	71,4	30,6	22	27	12	G1/8x10mm	M8	10	24	3	133-040-001
5	50,2	81,4	30,6	22	60	20	G1/8x10mm	M8	10	24	4	133-050-001
6	60,2	91,4	30,6	22	60	20	G1/8x10mm	M8	10	24	4	133-060-001
8	80,2	111,4	30,6	22	60	20	G1/8x10mm	M8	10	24	4	133-080-001
10	100,2	131,4	30,6	22	100	20	G1/8x10mm	M8	10	24	4	133-100-001
12	120,2	151,4	30,6	22	100	20	G1/8x10mm	M8	10	24	4	133-120-001

Radial & Axial lubricant supply

Description:
Mounting-axis for
PU-Lubrication Pinion;

Material:
Steel, nickel-plated

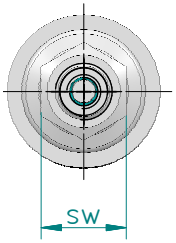

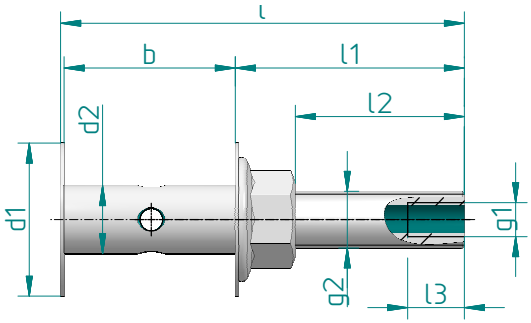

Axial (straight)

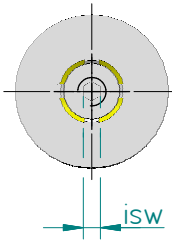

module	b	l	l1	l2	d1	d2	g1	g2	l3	sw	isw	part-no.
1,5	15,2	60,4	44,6	34,0	27	12	M6	M10	10	15	3	133-015-002
2	20,2	61,2	40,4	29,8	27	12	M6	M10	10	15	3	133-020-002
3	30,2	71,2	40,4	29,8	27	12	M6	M10	10	15	3	133-030-002
4	40,2	81,2	40,4	29,8	27	12	M6	M10	10	15	3	133-040-002
5	50,2	116,4	65,5	48,9	60	20	G1/8	M16	10	24	4	133-050-002
6	60,2	126,4	65,5	48,9	60	20	G1/8	M16	10	24	4	133-060-002
8	80,2	146,4	65,5	48,9	60	20	G1/8	M16	10	24	4	133-080-002
10	100,2	166,4	65,5	48,9	100	20	G1/8	M16	10	24	4	133-100-002
12	120,2	186,4	65,5	48,9	100	20	G1/8	M16	10	24	4	133-120-002

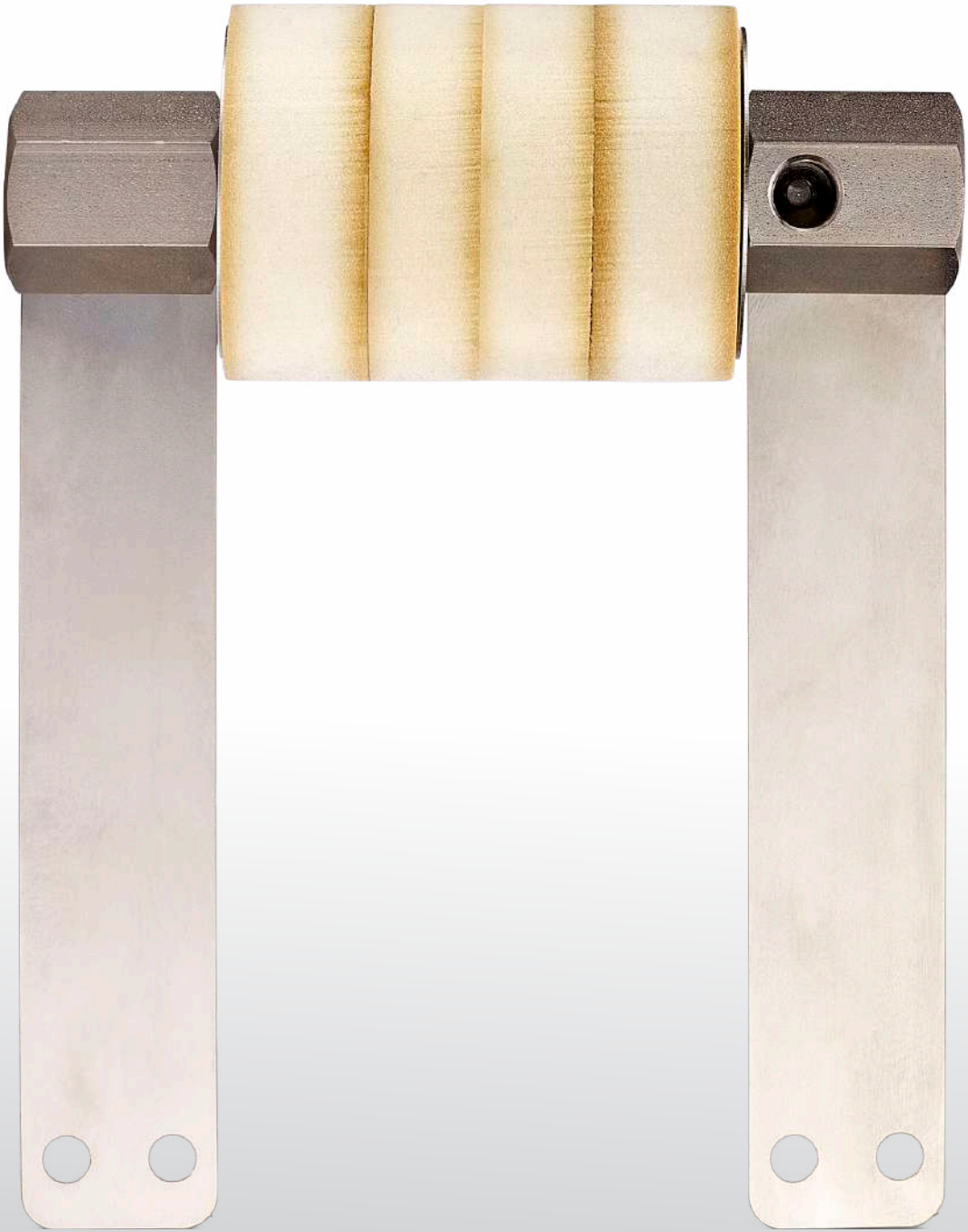

PU-Lubrication roll

The rolls of the PU-Lubrication roll consist of on open-cell polyurethane foam (temperature range -30 °C ... +120 °C) and are composed of several segments.

They are particularly suitable for the relubrication of chains or guides.

+ for grease lubrication
+ grease till NLGI class 2
+ Diameter up to 600 mm
+ Contours freely selectable
+ very good emergency running properties
+ Covers and enclosures on request

PU-Lubrication roll

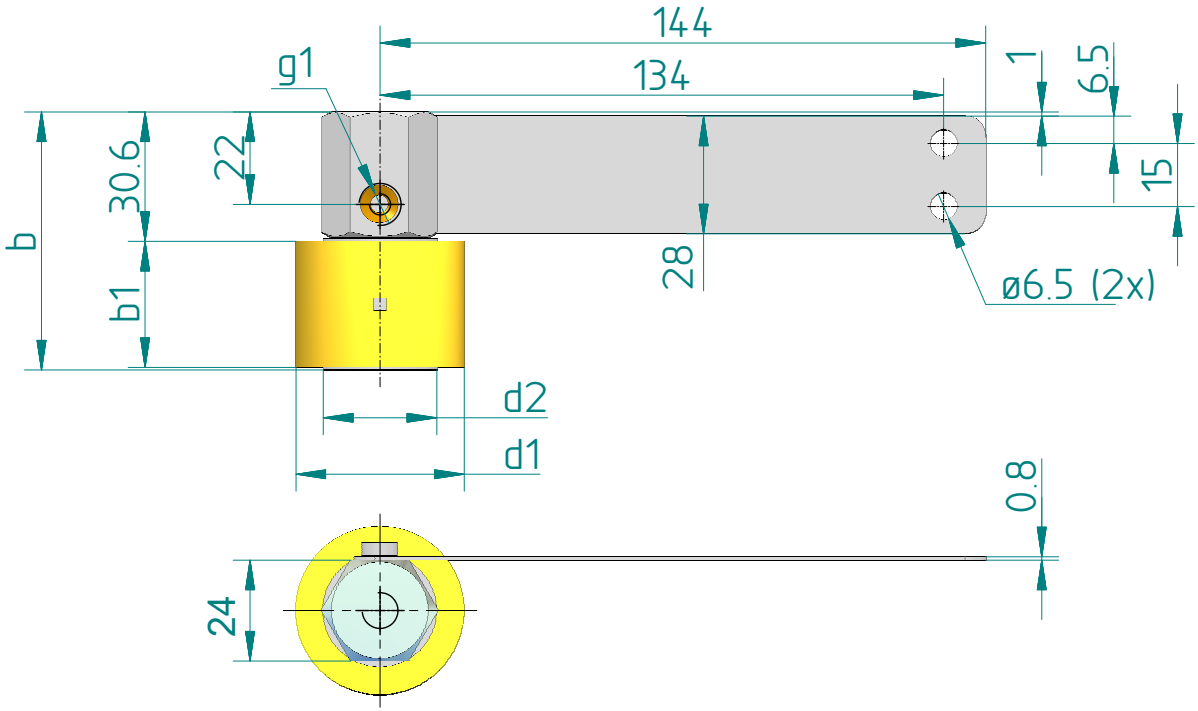

Description:
PU lubrication roll; slide bearing; with one-sided recording;
for radial lubricant supply;
Spring plate and screws supplied loose;
for grease applications

Material:
open-cell PU foam;
Steel, nickel-plated;
Spring plate in 1.4310

Single-sided

b1	d1	b	d2	g1	part-no.
20	40	51,4	27	M10x1 10mm	127-020-403
24	40	55,4	27	M10x1 10mm	127-024-403
30	40	61,4	27	M10x1 10mm	127-030-403
40	40	71,4	27	M10x1 10mm	127-040-403
45	40	76,4	27	M10x1 10mm	127-045-403
50	65	81,4	45	M10x1 10mm	127-050-653
60	65	91,4	45	M10x1 10mm	127-060-653

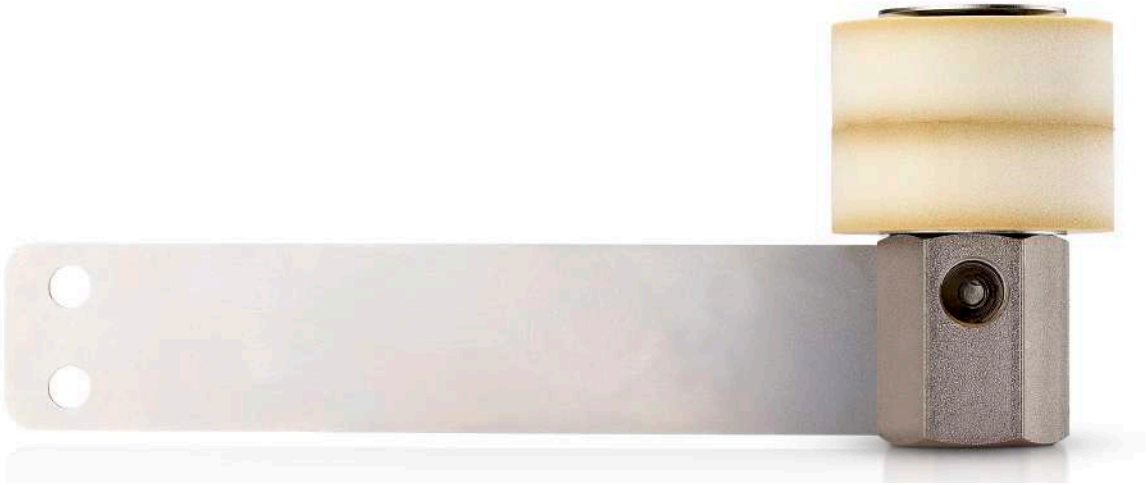

PU-Lubrication roll

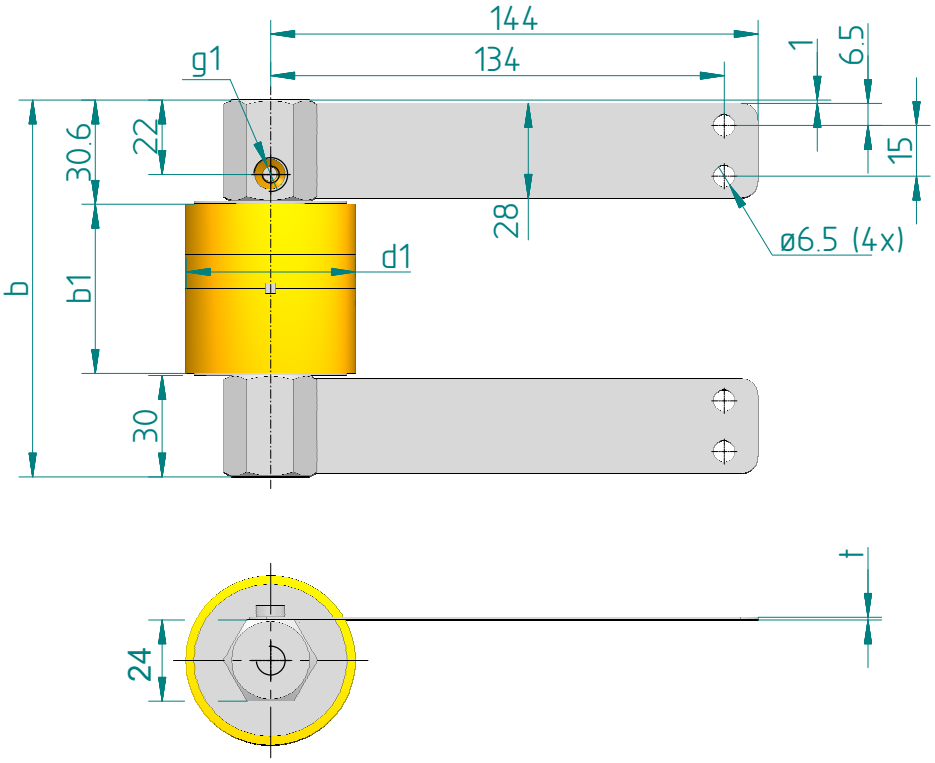

Description:
PU lubrication roll; slide bearing; with double-sided recording;
for one-sided, radial lubricant supply;
Spring plate and screws supplied loose;
for grease applications

Material:
open-cell PU foam;
Steel, nickel-plated;
Spring plate in 1.4310

Double-sided

b1	d1	b	g1	t	part-no.
60	65	121,4	M10x1 10mm	0,8	127-060-654
70	65	131,4	M10x1 10mm	0,8	127-070-654
80	65	141,4	M10x1 10mm	0,8	127-080-654
90	65	151,4	M10x1 10mm	0,8	127-090-654

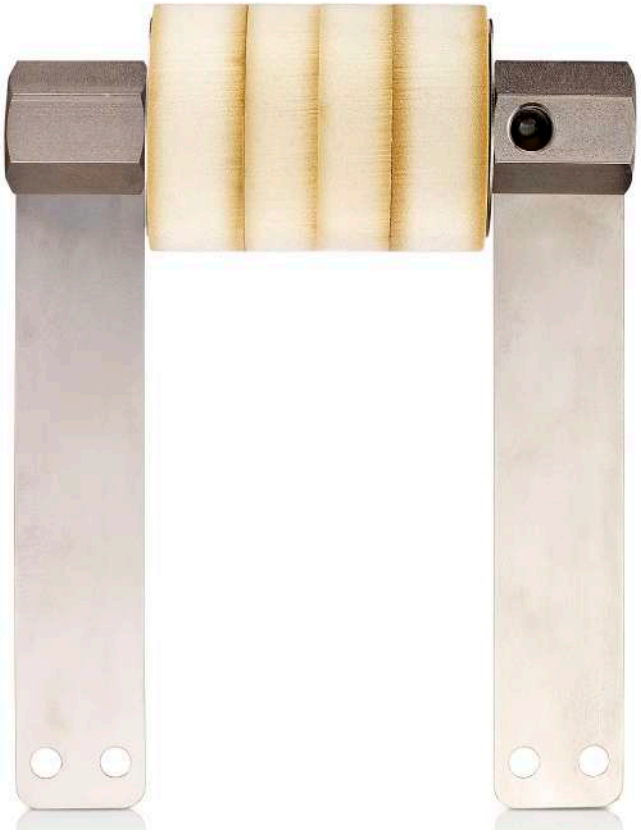

Splitter
for grease

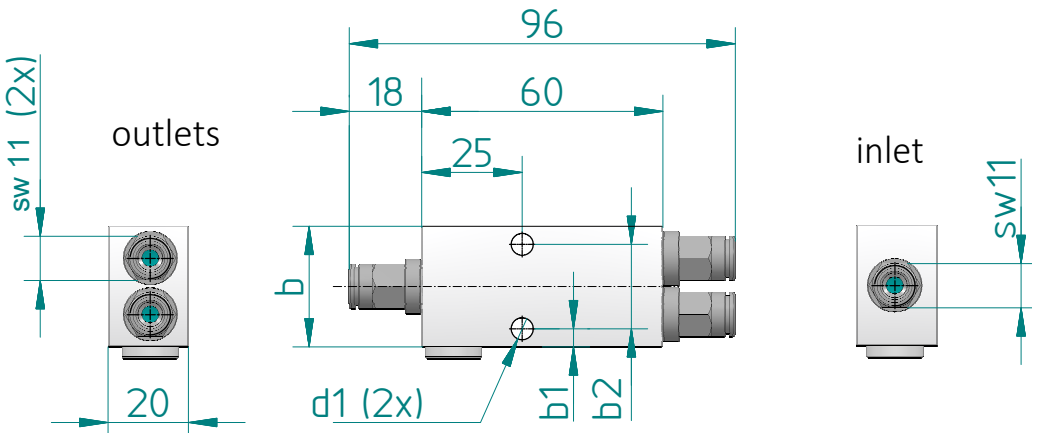

Description:
Passive flow dividers (splitters) to expand FlexxPump;
with tube connectors for tube 6

Material:
Splitter: aluminum
Connections: brass, nickel-plated

outlets	inlet	tube	outlets	tube	b	b1	b2	d1	part-no.
2	straight	6	straight	6	30	4,5	21	5,5	234-005-002
3	straight	6	straight	6	48	18	15	6,5	234-005-003
4	straight	6	straight	6	60	17,5	25	6,5	234-005-004

Lubricant distribution

The splitters must be connected as close as possible to the outlets of the FlexxPump.

The splitters preferably work in conjunction with the piston pumps of the FlexxPump series.

Only one splitter can be installed at each outlet of the FlexxPump.
Depending on the type, the FlexxPump Splitter can be connected:

- FlexxPump 125 max. 1 splitter with 4 outlets
- FlexxPump 400 max. 4 splitters with 4 outlets each
- FlexxPump 1500 max. 10 splitters with 4 outlets each

It is not possible to operate two or more splitters on one pump outlet (no cascade of distributors)!

It is important to ensure that the tube lengths after the distributor are the same.

The splitters can be used for greases up to NLGI 2, preferably with grease from the DLS range.

The splitters can not be used when using lubricants with a solid content.

Operating temperature range: +10 °C... +60 °C

The splitters are vented with oil with H1 approval on delivery.

Progressiv distributor

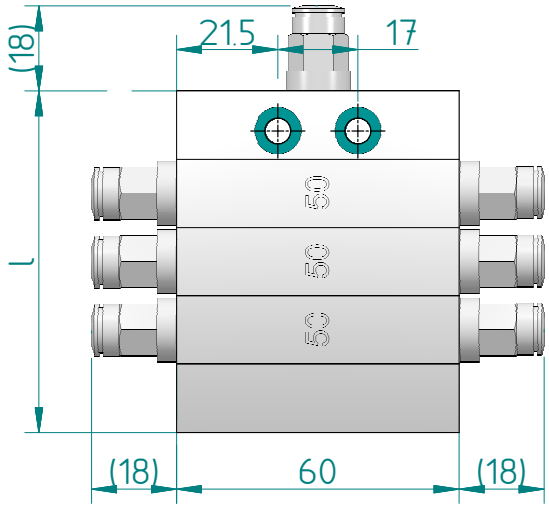

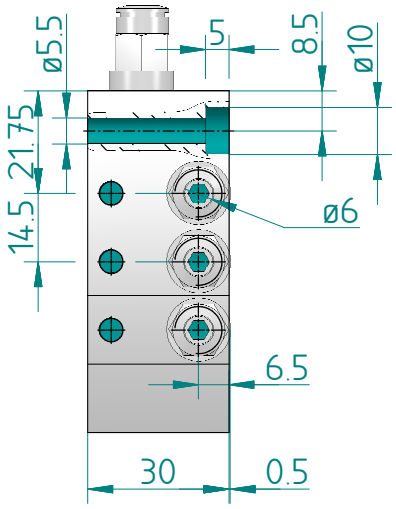

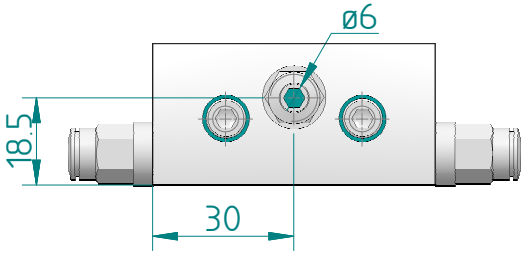

Description:
DLS progressiv distributor in lightweight solution are built in a variable disk construction for all types of FlexxPump series.
Adjustment is based on grease lubricants.
6-way disc distributor with 3 dosing disks; straight tube connectors for tube 6 mm at inlet and outlets.

Material:
Distributor: aluminum;
Connections: brass, nickel-plated

Lubricant distribution

outlets	inlet	tube	outlets	tube	l	part-no.
2	straight	6	straight	6	72,5	238-000-002
3	straight	6	straight	6	72,5	238-000-003
4	straight	6	straight	6	72,5	238-000-004
5	straight	6	straight	6	72,5	238-000-005
6	straight	6	straight	6	72,5	238-000-006
7	straight	6	straight	6	87,0	238-000-007
8	straight	6	straight	6	87,0	238-000-008
9	straight	6	straight	6	101,5	238-000-009
10	straight	6	straight	6	101,5	238-000-010

Standard design:
- Modularly disk constructed distributor in lightweight aluminum with special coordination with FlexxPump 125/400/1500 for DLS greases
- 2 to 10 outlets per distributor possible
- Tube connection to inlet and outlets straight for tube 6
- Maximum pressure 100 bar
- Dosing volume 50 mm^3

Special design (on request):
- Tube connection in various designs, straight / angled
- Different tube diameters, 4/6/8 mm at inlet or outlet
- Determination of the locations of the outlets
- Different delivery quantities per outlet through disk elements with different dosing volume (25/50/100 mm^3)

Good to know:
- Only suitable DLS lubricant can be used!
- Operating temperature range: -20 °C ... + 60 °C (depending on the lubricant used)
- Cannot be used in series in conjunction with FlexxPump 125/400/1500 (no main and secondary distributors / cascading)
- Vented with oil with H1 approval

Progressiv distributor with circulation monitoring

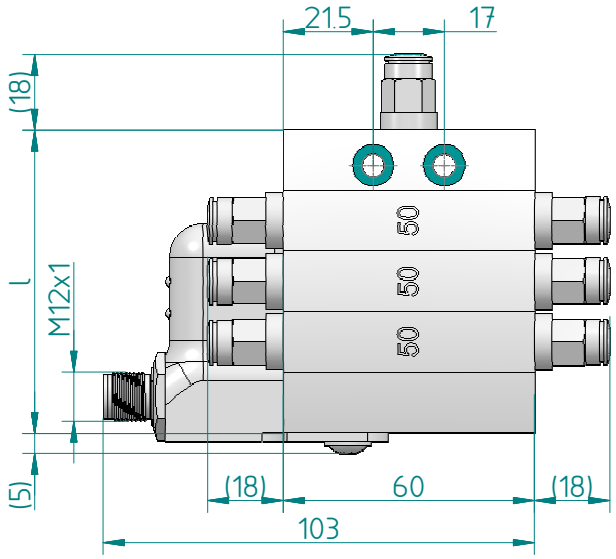

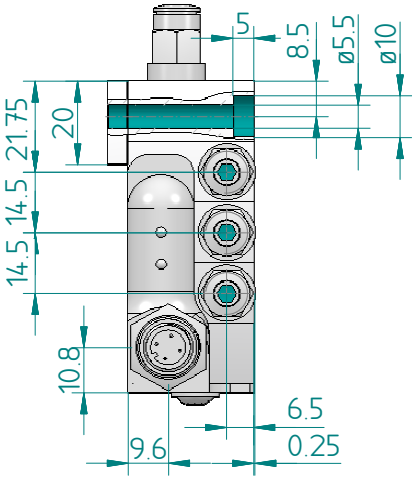

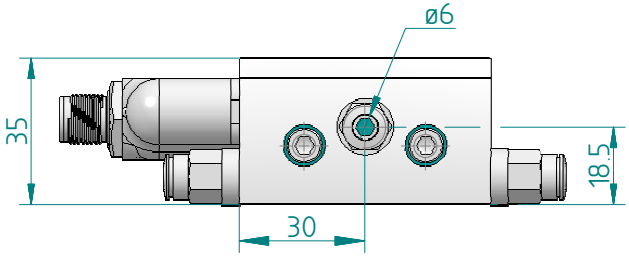

Description:
DLS progressiv distributor in lightweight solution are built in a variable disk construction for all types of the FlexxPump series.
Adjustment is based on grease lubricants
6-way disc distributor with 3 dosing elements; straight tube connection for tube 6 mm on inlet and outlets.

Material:
Distributor: aluminum
Connections: brass, nickel-plated

Lubricant distribution

outlets	inlet	tube	outlets	tube	l	part-no.
2	straight	6	straight	6	72,5	238-010-002
3	straight	6	straight	6	72,5	238-010-003
4	straight	6	straight	6	72,5	238-010-004
5	straight	6	straight	6	72,5	238-010-005
6	straight	6	straight	6	72,5	238-010-006
7	straight	6	straight	6	87,0	238-010-007
8	straight	6	straight	6	87,0	238-010-008
9	straight	6	straight	6	101,5	238-010-009
10	straight	6	straight	6	101,5	238-010-010

Standard design:
- Modularly disk constructed distributor in lightweight aluminum with special coordination with FlexxPump 125/400/1500 for DLS greases
- With circulation monitoring to control the correct operation of all outlets
- 2 to 10 outlets per distributor possible
- Tube connection to inlet and outlets straight for tube 6
- Maximum pressure 100 bar
- Dosing volume 50 mm^3

Special design (on request):
- Tube connection in various designs, straight / angled
- Different tube diameters, 4/6/8 mm at inlet or outlet
- Determination of the locations of the outlets
- Different delivery quantities per outlet through disk elements with different dosing volume (25/50/100 mm^3)

Good to know:
- Only suitable DLS lubricant can be used!
- Operating temperature range: -20 °C ... + 60 °C (depending on the lubricant used)
- Cannot be used in series in conjunction with FlexxPump 125/400/1500 (no main and secondary distributors / cascading)
- Vented with oil with H1 approval

Tube connectors

Application:
pluggable connection with the tubes

Technical specifications:
- operating pressure 80 bar
- operating temperature -20 °C... +80 °C
- medium fats
- material Ms 58 (nickel-plated), NBR, stainless steel

Features:
- sealing at the connection point with integrated O-rings
- easy assembly of the tubes
- all straight tube connectors with additional hexagon socket

Tube connectors, straight

Typ A

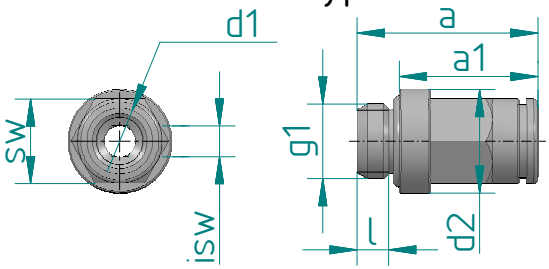

Typ B

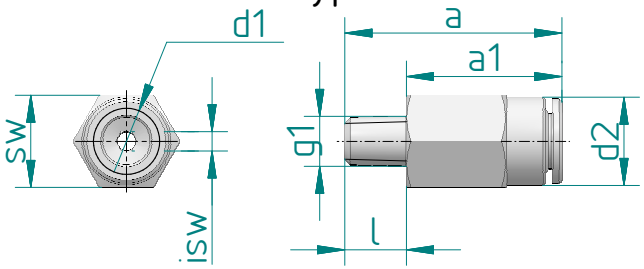

Typ C

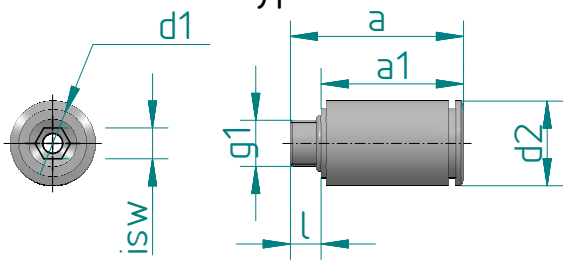

Description:
Tube connector straight

Material:
brass, nickel-plated

The fasteners

d1	g1	type	d2	a	a1	l	g1	sw	isw	part-no.
4	M3	C	9	21,3	16,3	5	DIN 13-1	-	1,5	134-000-017
4	M5	C	9	20,5	16,5	4	DIN 13-1	-	2,5	134-000-016
4	M6x0,75	C	9	23,5	16,5	5	DIN 13-2	-	2,5	134-000-009
4	M6	C	9	23,5	16,5	7	DIN 13-1	-	2,5	134-000-006
4	G1/8	A	13,5	24	18	5	ISO 228-1	9	2,5	134-000-012
6	M5	C	11	22,5	17,8	4	DIN 13-1	-	2,5	134-000-015
6	M6x0,75	C	11	22,5	17,8	5	DIN 13-2	-	2,5	134-000-010
6	M6	B	11,5	28,2	20	8	DIN 158-1	12	2,5	134-000-014
6	M6	C	11	22,5	18,5	4	DIN 13-1	-	2,5	134-000-001
6	M8x1	B	11	25,8	17,8	8	DIN 158-1	11	4	134-000-005
6	M10x1	A	13,5	24	18	6	DIN 13-3	11	4	134-000-011
6	G1/8	A	13,5	24	18,5	5	ISO 228-1	11	4	134-000-002
6	G1/4	A	17	24	16	8	ISO 228-1	11	4	134-000-004
6	R1/8 BSPT	A	12	26	18	8	DIN 2999-5	13	4	134-000-003
8	M10x1	A	13	26,5	20,5	6	DIN 13-2	13	5	134-000-019
8	G1/8	A	11	26,5	20,5	6	ISO 228-1	13	5	134-000-008
8	G1/4	A	17	23,5	17	6,5	ISO 228-1	13	6	134-000-018

Tube connectors, right-angled

Typ A

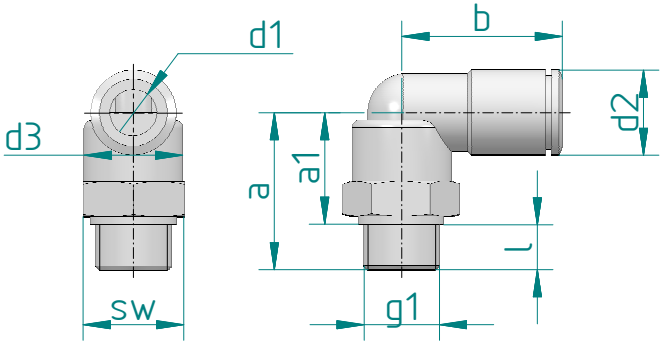

Typ B

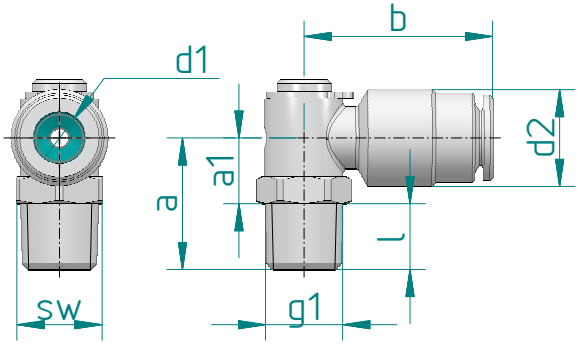

Description:
Tube connector right-angled;
360° rotatable

Material:
brass, nickel-plated

The fasteners

d1	g1	type	d2	a	a1	b	l	g1	sw	part-no.
4	M3	A	9,1	16	11	18,2	5	DIN 13-1	6	134-001-021
4	M5	A	9	14,8	10,8	18	4	DIN 13-1	9	134-001-020
4	M6x0,75	A	9	15,8	10,8	18	5	DIN 13-2	9	134-001-011
4	M6	A	9	15,8	10,8	17,2	5	DIN 13-1	9	134-001-007
4	G1/8	A	9	14,8	8,9	20	5,9	ISO 228-1	13	134-001-018
6	M5	A	11	14,8	10,8	21	4	DIN 13-1	9	134-001-019
6	M6	A	11	15,5	10,5	20,5	5	DIN 13-1	9	134-001-001
6	M6x0,75	A	11	15,8	10,8	20,8	5	DIN 13-2	9	134-001-012
6	M6	B	11	16,5	8,5	24,3	8	DIN 13-1	11	134-001-014
6	M8x1	B	11	17,8	11	17,2	6,8	DIN 13-2	9	134-001-010
6	M10x1	A	11	20,3	14,4	20,8	5,9	DIN 13-2	13	134-001-006
6	M10x1	A	11	24	18	20,5	6	DIN 13-2	13	134-001-017
6	R1/8	B	11,5	17	8,5	24,3	8,5	DIN 2999-5	11	134-001-016
6	G1/8	A	11	20,3	14,4	20,8	5,9	ISO 228-1	13	134-001-002
6	G1/4	A	11	24	16	21,5	7	ISO 228-1	13	134-001-009
8	M10x1	A	13	24,5	18,5	23,5	6	DIN 13-2	13	134-001-023
8	G1/8	A	13	20,3	14,3	24	6	ISO 228-1	13	134-001-024
8	G1/4	A	13	23,3	16,8	23,5	6,5	ISO 228-1	13	134-001-022
8	M6	A	13	19,5	14,5	23,5	5	DIN 13-1	13	134-001-025

Tube connectors with non-return valve

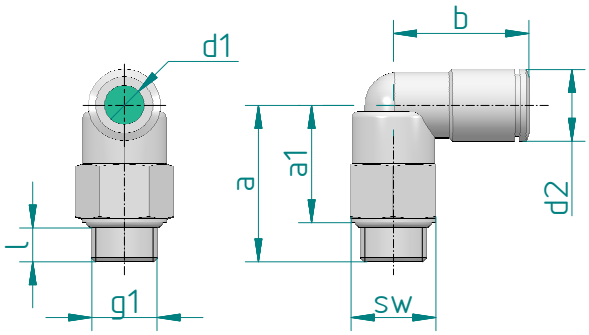

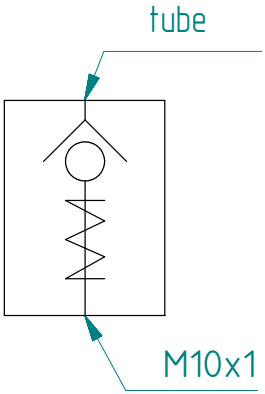

Description:
Tube connector with integrated non-return valve;
right-angled; 360° rotatable;

Material:
brass, nickel-plated;
seal: NBR

d1	g1	d2	a	a1	b	l	sw	part-no.
4	M10x1	9	24	18	20	5,5	13	134-001-200
6	M10x1	11	24	18	20,5	5,5	13	134-001-201
8	M10x1	13	25	19	23,5	5,5	13	134-001-202

Connections & Reductions

Typ A

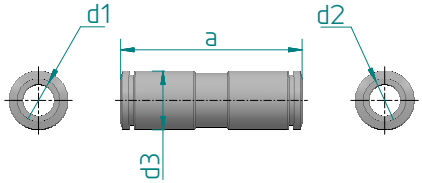

Typ B

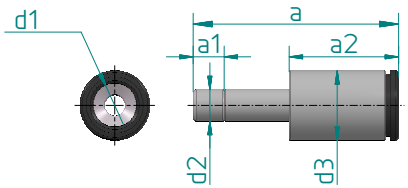

Typ C

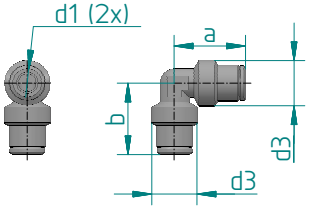

Typ D

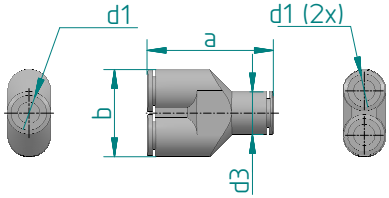

Description:
Connections and Reductions;
straight or right-angled

Material:
brass, nickel-plated;

type	d1	d2	d3	a	a1	a2	b	part-no.
A	4	4	9	32	--	--	--	134-000-111
A	6	4	11	34	--	--	--	134-000-106
A	6	6	11	34	--	--	--	134-000-104
A	6	8	13	39	--	--	--	134-000-105
B	4	6	9	30,5	5,1	12,5	--	134-000-110
B	6	4	11	35	10,8	17,8	--	134-000-109
B	8	6	13	38,5	11,6	20,5	--	134-000-108
C	4	-	9	17,5	--	--	17,5	134-001-106
C	6	-	11	20,1	--	--	20,1	134-001-104
D	6	6	12	35,5	--	--	24,5	134-002-000
D	8	8	14	37,9	--	--	28,5	134-002-023

Connections

Typ A

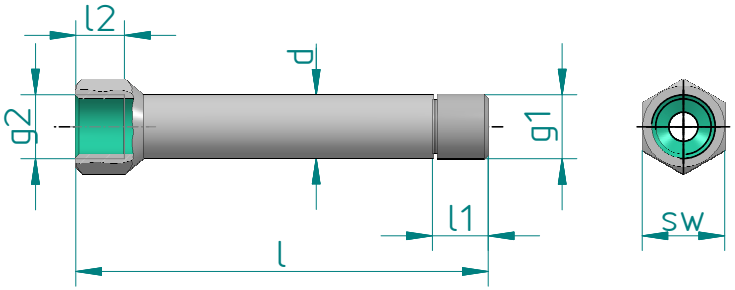

Typ B

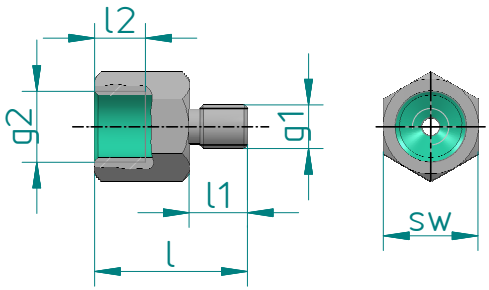

type	g1	g2	l	l1	l2	d	sw	material	part-no.
A	G1/8	G1/8	50,0	12	15,0	14	17	brass, nickel-plated	134-000-703
A	G1/4	G1/4	85,0	11,5	10,0	13	17	Galvanized steel	134-000-701
A	G1/4	G1/4	104,0	11,5	10,0	13	17	Galvanized steel	134-000-702
A	G1/4	G1/4	122,0	13,5	10,0	14	17	Steel, nickel-plated	134-000-712
B	M3	M6	17,5	5,5	7	--	9	brass, nickel-plated	134-000-709
B	M4	M3	16	5	6	--	6	brass, nickel-plated	134-000-707
B	M4	M6	18,5	5	7	--	9	brass, nickel-plated	134-000-708
B	M6	M10x1	21	6,5	7	--	13	brass, nickel-plated	134-000-704
B	M6	G1/8	21	6,5	7	--	13	brass, nickel-plated	134-000-705
B	M8	M6	19,2	9	7,5	--	10	brass, nickel-plated	134-000-706
B	M8	G1/8	24	8,5	8	--	17	brass, nickel-plated	134-000-710
B	M10x1	G1/4	24	8,5	8	--	17	brass, nickel-plated	134-000-711
B	G1/8	G1/4	35	7	12	13	17	Steel, nickel-plated	134-000-700

Tube connectors stainless steel

Typ A

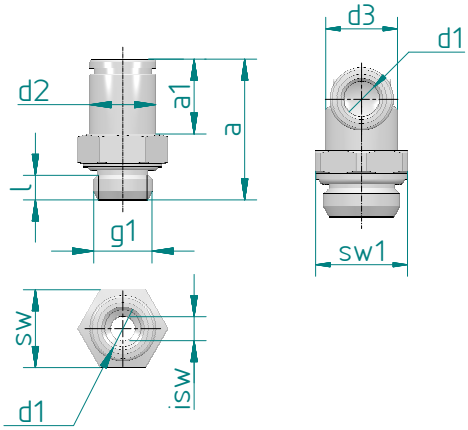

Typ B

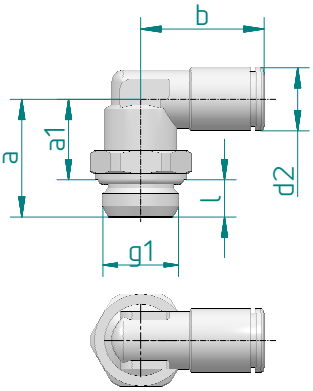

Description type A:
Tube connector straight

Description type B:
Tube connector right-angled;
360° rotatable; cylindrical thread

Material:
1.4401; Seal: FKM

type	d1	d2	a	a1	b	g1	l	sw	isw	part-no.
A	4	9	20,5	7	-	M5	4	9	2,5	134-000-901
A	4	9	19	9	-	G1/8	5,5	13	3	134-000-902
A	6	11	22,5	17,5	-	M5	4	-	2,5	134-000-904
A	6	11	23,5	12,5	-	G1/8	5,5	13	4	134-000-905
A	6	11	20	13,5	-	G1/4	6,5	16	4	134-000-906
A	8	13	26	21,5	-	G1/8	5,5	13	5	134-000-907
A	8	13	26	20,5	-	G1/4	6,5	13	5	134-000-908
B	4	9	14,8	10,8	18,2	M5	4	13		134-001-901
B	4	9	19,3	13,8	20	G1/8	5,5	13		134-001-902
B	4	9	20,5	14	20	G1/4	6,5	16		134-001-903
B	6	11	17,6	13,6	20,5	M5	4	9		134-001-904
B	6	11	19,3	13,8	21,5	G1/8	5,5	13		134-001-905
B	6	11	20,5	14	21,5	G1/4	6,5	16		134-001-906
B	8	13	19,3	14,6	23,5	G1/8	4,7	13		134-001-907
B	8	13	20,5	14	23,5	G1/4	6,5	16		134-001-908

DLS
F01
DLS
OE1
DLS
F02
DLS
F04
DLS
F03
DLS
F03
DLS
OE1
DLS
F04
DLS
F02
DLS
F01

DLS-Lubricants

We provide you selected high-performance lubricants, suitable for your application

Lubricating greases are the first choice when lubricants have to stay at the friction point as long as possible. In addition to the best lubrication, they protect friction points against external influences such as splash water, moisture and dirt and protect against corrosion and wear.

On the following pages you will find the right lubricant for every application.

Grease F01
Standard grease for open gears

Grease F01 | DIN 51825 OGP0N-30 | NLGI-class 0...1

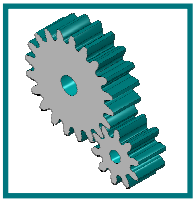

- Based on lithium / calcium complex with high pressure additives, which are connected to the soap structure and thus have safe access to the metal surface
- Heat-resistant, has good corrosion protection properties and does not contain solid lubricants

Commitment:
- Developed as a lubricating grease for highly loaded open gear drives
- Due to its high temperature properties, it is suitable for a wide range of applications where high temperatures are associated with extreme loads
- Can also be recommended for plain bearings / bushings

Operating temperature range -30 °C to + 150 °C

description	lubricant	volume	usage	part-no.
cartridge for FlexxPump 125	F01	125 cc	FlexxPump 125	000-101-101
cartridge for FlexxPump 125	F01	250 cc	FlexxPump 125	000-101-102
cartridge for FlexxPump 250	F01	250 cc	FlexxPump 250	000-101-103
cartridge for FlexxPump 400	F01	400 cc	FlexxPump 400	000-101-105
grease bellow for FlexxPump 1500	F01	1500 cc	FlexxPump 1500	000-101-115
tin	F01	1 kg		000-101-210
cartridge for hand press (DIN 1284)	F01	400 cc		000-101-220
hobbock	F01	18 kg		000-101-240
barrel	F01	180 kg		000-101-250

description	lubricant	length	part-no.
tube 6x4	F01	2 m	134-023-001
tube 6x4	F01	5 m	134-053-001
tube 6x4	F01	10 m	134-003-001
tube 8x5	F01	10 m	134-008-001

Grease F02
Standard grease with H1 approval

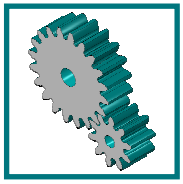

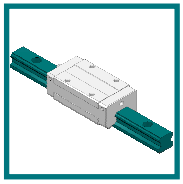

Grease F02 | DIN 51502 KP2R-25 | NLGI-class 2

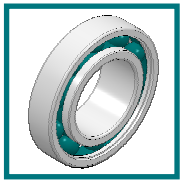

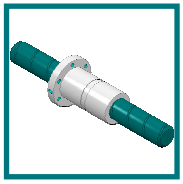

- Synthetic special grease for high specific loads
- A special additive gives this special grease high thermal and oxidative stability and good corrosion and wear protection properties
- NSF / H1 approval

Commitment:
- cold, hot water and steam resistant
- high oxidation and thermal stability
- high load-bearing capacity, good wear protection
- long service life and wide service temperature range
- high lubricating effect with low friction coefficients

Operating temperature range -40 °C to + 140 °C

description	lubricant	volume	usage	part-no.
cartridge for FlexxPump 125	F02	125 cc	FlexxPump 125	000-102-101
cartridge for FlexxPump 125	F02	250 cc	FlexxPump 125	000-102-102
cartridge for FlexxPump 250	F02	250 cc	FlexxPump 250	000-102-103
cartridge for FlexxPump 400	F02	400 cc	FlexxPump 400	000-102-105
grease bellow for FlexxPump 1500	F02	1500 cc	FlexxPump 1500	000-102-115
tin	F02	1 kg		000-102-210
cartridge for hand press (DIN 1284)	F02	400 cc		000-102-220
hobbock	F02	18 kg		000-102-240
barrel	F02	180 kg		000-102-250

description	lubricant	length	part-no.
tube 6x4	F02	2 m	134-023-002
tube 6x4	F02	5 m	134-053-002
tube 6x4	F02	10 m	134-003-002
tube 8x5	F02	5 m	134-008-002

Grease F03
Linear guides & ball screw

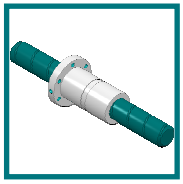

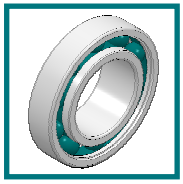

Grease F03 | DIN 51825 KP2K-20 | NLGI-class 2

- very short-fiber and homogeneous lithium saponified universal grease with a mineral oil that used for the lubrication of roller and plain bearings and can be used for medium to high loads
- very adhesive; suitable for short stroke applications
- water-resistant and anti-corrosive

Commitment:
- Lubrication of linear guides (recirculating ball guides, roller guides and Ball screws)
- Can be used together with a lubrication Pinion and continuous relubrication for open gears
- Very good eligibility in relubrication facilities

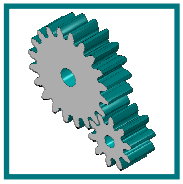

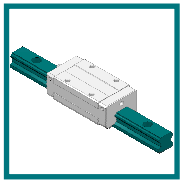

Operating temperature range -20 °C to + 120 °C

description	lubricant	volume	usage	part-no.
cartridge for FlexxPump 125	F03	125 cc	FlexxPump 125	000-103-101
cartridge for FlexxPump 125	F03	250 cc	FlexxPump 125	000-103-102
cartridge for FlexxPump 250	F03	250 cc	FlexxPump 250	000-103-103
cartridge for FlexxPump 400	F03	400 cc	FlexxPump 400	000-103-105
grease bellow for FlexxPump 1500	F03	1500 cc	FlexxPump 1500	000-103-115
tin	F03	1 kg		000-103-210
cartridge for hand press (DIN 1284)	F03	400 cc		000-103-220
hobbock	F03	18 kg		000-103-240
barrel	F03	170 kg		000-103-250

description	lubricant	length	part-no.
tube 4x2,5	F03	5 m	102-011-013
tube 6x4	F03	2 m	134-023-003
tube 6x4	F03	5 m	134-053-003
tube 6x4	F03	10 m	134-003-003
tube 8x5	F03	10 m	134-008-003

Grease F04
Special grease for bearing lubrication

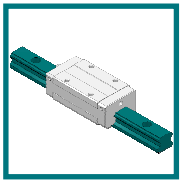

Grease F04 | DIN 51502 KP2K-20 | NLGI-class 2

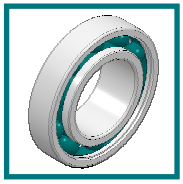

- Lithium-calcium saponified multi-purpose grease with a mineral oil that can be used for the lubrication of roller and slide bearings under medium loads
- Suitable for sometimes shock loads; water-resistant and anti-corrosive

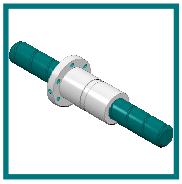

Commitment:
- Lubrication of ball and roller bearings; ball screw
- Can be used together with a lubrication Pinion and continuous relubrication for open gears
- Good eligibility in relubrication facilities and distributor

Operating temperature range -30 °C to + 130 °C

description	lubricant	volume	usage	part-no.
cartridge for FlexxPump 125	F04	125 cc	FlexxPump 125	000-104-101
cartridge for FlexxPump 125	F04	250 cc	FlexxPump 125	000-104-102
cartridge for FlexxPump 250	F04	250 cc	FlexxPump 250	000-104-103
cartridge for FlexxPump 400	F04	400 cc	FlexxPump 400	000-104-105
grease bellow for FlexxPump 1500	F04	1500 cc	FlexxPump 1500	000-104-115
tin	F04	1 kg		000-104-210
cartridge for hand press (DIN 1284)	F04	400 cc		000-104-220
hobbock	F04	18 kg		000-104-240
barrel	F04	180 kg		000-104-250

description	lubricant	length	part-no.
tube 6x4	F04	2 m	134-023-004
tube 6x4	F04	5 m	134-053-004
tube 6x4	F04	10 m	134-003-004
tube 8x5	F04	10 m	134-008-004

Grease F05
Special grease for open gears

Grease F05 | DIN 51502 KPF2-P | NLGI-class 2

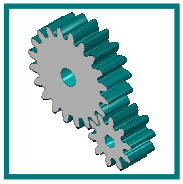

- Aluminum complex soap with graphite additives
- Highly viscous mineral oil
- Heat-resistant and anti-corrosive

Commitment:
- Lubrication of heavily loaded gears
- Can be pumped very well till 0 °C

Operating temperature range -20 °C to + 150 °C

description	lubricant	volume	usage	part-no.
cartridge for FlexxPump 125	F05	125 cc	FlexxPump 125	000-105-101
cartridge for FlexxPump 125	F05	250 cc	FlexxPump 125	000-105-102
cartridge for FlexxPump 250	F05	250 cc	FlexxPump 250	000-105-103
cartridge for FlexxPump 400	F05	400 cc	FlexxPump 400	000-105-105
grease bellow for FlexxPump 1500	F05	1500 cc	FlexxPump 1500	000-105-115
tin	F05	1 kg		000-105-210
cartridge for hand press (DIN 1284)	F05	400 cc		000-105-220
hobbock	F05	18 kg		000-105-240
barrel	F05	185 kg		000-105-250

description	lubricant	length	part-no.
tube 6x4	F05	5 m	134-053-005
tube 6x4	F05	10 m	134-003-005
tube 8x5	F05	5 m	134-008-005

Grease F06
High performance lubricant

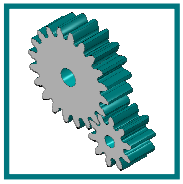

Grease F06

- synthetic, high viscosity lubricant
- excellent corrosion protection
- very wide temperature range

Commitment:
- Lubrication of highly stressed friction points (e.g. gears, chains)
- Water resistance
- Very high tendency to stick prevents being thrown off
- Pumpability in lubrication systems: 0 °C ... + 80 °C

Operating temperature range: -10 °C ... + 250 °C

description	lubricant	volume	usage	part-no.
cartridge for FlexxPump 125	F06	125 cc	FlexxPump 125	000-106-101
cartridge for FlexxPump 125	F06	250 cc	FlexxPump 125	000-106-102
cartridge for FlexxPump 250	F06	250 cc	FlexxPump 250	000-106-103
cartridge for FlexxPump 400	F06	400 cc	FlexxPump 400	000-106-105
grease bellow for FlexxPump 1500	F06	1500 cc	FlexxPump 1500	000-106-115
tin	F06	1 kg		000-106-210
hobbock	F06	18 kg		000-106-240
barrel	F06	180 kg		000-106-250

description	lubricant	length	part-no.
tube 6x4	F06	5 m	134-053-006
tube 6x4	F06	10 m	134-003-006
tube 8x5	F06	5 m	134-008-006

Grease F07
High temperature-special grease for bearing

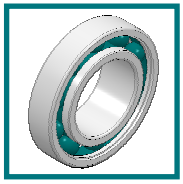

Grease F07 | DIN 51825 KPHC2P-40 | NLGI-class 2

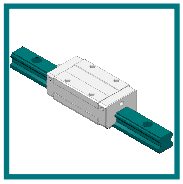

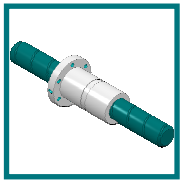

- synthetic (polyalphaolefin) high-performance grease
- small proportions of PTFE as a solid lubricant
- large temperature range

Commitment:
- Sliding and roller bearing; KGT nuts; Recirculating ball bearings
- Pumpability in lubrication systems: -40 °C ... + 80 °C

Operating temperature range: -40 °C ... + 160 °C

description	lubricant	volume	usage	part-no.
cartridge for FlexxPump 125	F07	125 cc	FlexxPump 125	000-107-101
cartridge for FlexxPump 125	F07	250 cc	FlexxPump 125	000-107-102
cartridge for FlexxPump 250	F07	250 cc	FlexxPump 250	000-107-103
cartridge for FlexxPump 400	F07	400 cc	FlexxPump 400	000-107-105
grease bellow for FlexxPump 1500	F07	1500 cc	FlexxPump 1500	000-107-115
tin	F07	1 kg		000-107-210
cartridge for hand press (DIN 1284)	F07	400 cc		000-107-220
hobbock	F07	18 kg		000-107-240
barrel	F07	180 kg		000-107-250

description	lubricant	length	part-no.
tube 6x4	F07	5 m	134-053-007
tube 6x4	F07	10 m	134-003-007
tube 8x5	F07	10 m	134-008-007

Grease F08
Low temperature-special grease for bearing

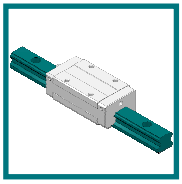

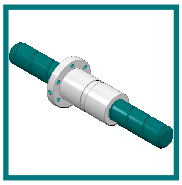

Grease F08 | DIN 51502 KP HC 2 P-40 | NLGI-class 2

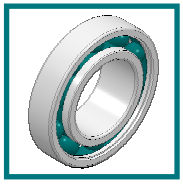

- fully synthetic grease
- very good wear and corrosion protection
- easily pumpable at low temperatures

Commitment:
- Sliding and roller bearing; KGT nuts; Recirculating ball bearings
- Pumpability in lubrication systems: -25 °C ... + 80 °C

Operating temperature range: -40 °C ... + 180 °C

description	lubricant	volume	usage	part-no.
cartridge for FlexxPump 125	F08	125 cc	FlexxPump 125	000-108-101
cartridge for FlexxPump 125	F08	250 cc	FlexxPump 125	000-108-102
cartridge for FlexxPump 250	F08	250 cc	FlexxPump 250	000-108-103
cartridge for FlexxPump 400	F08	400 cc	FlexxPump 400	000-108-105
grease bellow for FlexxPump 1500	F08	1500 cc	FlexxPump 1500	000-108-115
tin	F08	1 kg		000-108-210
cartridge for hand press (DIN 1284)	F08	400 cc		000-108-220
hobbock	F08	18 kg		000-108-240
barrel	F08	180 kg		000-108-250

description	lubricant	length	part-no.
tube 6x4	F08	5 m	134-053-008
tube 6x4	F08	10 m	134-003-008
tube 8x5	F08	10 m	134-008-008

Grease F09
Special grease for fast moving roller bearing

Grease F09 | DIN 51502 KP 2K-30 | NLGI-class 2

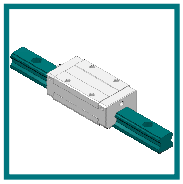

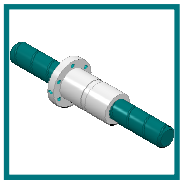

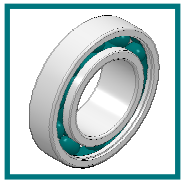

- Lithium special soap
- Mineral oil based with additives

Commitment:
- Lubrication of high-speed bearings and gears, KGT; Spindle and plain bearings
- Pumpability in lubrication systems: -10 °C ... + 80 °C

Operating temperature range -10 °C to + 80 °C

description	lubricant	volume	usage	part-no.
cartridge for FlexxPump 125	F09	125 cc	FlexxPump 125	000-109-101
cartridge for FlexxPump 125	F09	250 cc	FlexxPump 125	000-109-102
cartridge for FlexxPump 250	F09	250 cc	FlexxPump 250	000-109-103
cartridge for FlexxPump 400	F09	400 cc	FlexxPump 400	000-109-105
grease bellow for FlexxPump 1500	F09	1500 cc	FlexxPump 1500	000-109-115
tin	F09	1 kg		000-109-210
cartridge for hand press (DIN 1284)	F09	400 cc		000-109-220

description	lubricant	length	part-no.
tube 6x4	F09	5 m	134-053-009
tube 6x4	F09	10 m	134-003-009
tube 8x5	F09	10 m	134-008-009

Grease F10
Long-term grease for roller and plain bearings

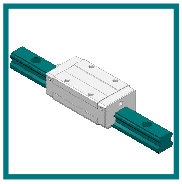

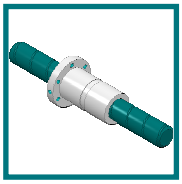

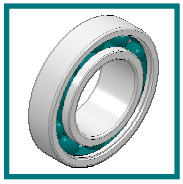

Grease F10 | NLGI-class 2

- lithium saponified, partially synthetic grease lubricant
- best wear protection
- very good non-ferrous metal and aging protection
- optimal high and low temperature behavior

Commitment:
- Sliding and roller bearing; KGT nuts; Recirculating ball carriage
- Pumpability in lubrication systems: -20 °C ... + 80 °C

Operating temperature range: -40 °C ... +140 °C

description	lubricant	volume	usage	part-no.
cartridge for FlexxPump 125	F10	125 cc	FlexxPump 125	000-110-101
cartridge for FlexxPump 125	F10	250 cc	FlexxPump 125	000-110-102
cartridge for FlexxPump 250	F10	250 cc	FlexxPump 250	000-110-103
cartridge for FlexxPump 400	F10	400 cc	FlexxPump 400	000-110-105
grease bellow for FlexxPump 1500	F10	1500 cc	FlexxPump 1500	000-110-115
cartridge for hand press (DIN 1284)	F10	400 cc		000-110-220

description	lubricant	length	part-no.
tube 6x4	F10	5 m	134-053-010
tube 6x4	F10	10 m	134-003-010
tube 8x5	F10	10 m	134-008-010

Grease F11

Special grease for rolling bearings for high alternating loads

Grease F11 | DIN 51825 KP 1 K-20 | NLGI-class 1

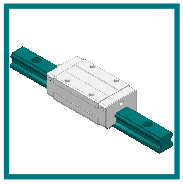

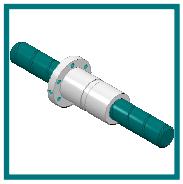

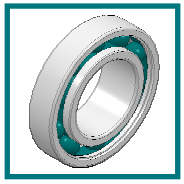

- Lithium special soap
- Semi-synthetic high-speed grease
- HD additives and emergency running properties
- Very good pumpability in lubrication systems

Commitment:
- Lubrication of roller bearings, recirculating ball bearing guides, spindles and KGT
- Pumpability in lubrication systems: -20 °C ... + 80 °C

Operating temperature range -20 °C to + 120 °C

description	lubricant	volume	usage	part-no.
cartridge for FlexxPump 125	F11	125 cc	FlexxPump 125	000-111-101
cartridge for FlexxPump 125	F11	250 cc	FlexxPump 125	000-111-102
cartridge for FlexxPump 250	F11	250 cc	FlexxPump 250	000-111-103
cartridge for FlexxPump 400	F11	400 cc	FlexxPump 400	000-111-105
grease bellow for FlexxPump 1500	F11	1500 cc	FlexxPump 1500	000-111-115
cartridge for hand press (DIN 1284)	F11	400 cc		000-111-220

description	lubricant	length	part-no.
tube 6x4	F11	5 m	134-053-011
tube 6x4	F11	10 m	134-003-011
tube 8x5	F11	10 m	134-008-011

Grease F14
High-performance universal grease

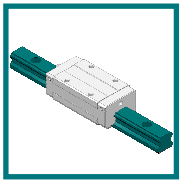

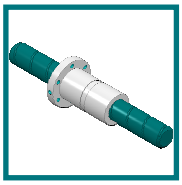

Grease F14 | GB 0 | NLGI-class 0

- Special lubricating grease based on mineral oil
- High pressure absorption capacity
- High wear protection
- Good corrosion protection properties
- Very easy to convey in lubrication systems
- High water resistance

Commitment:
- Lubrication of roller bearing, slide bearing, ball screw, linear guides
- Pumpability in lubrication systems: -25 °C ... + 180 °C

Operating temperature range -25 °C to + 180 °C

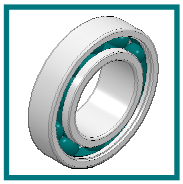

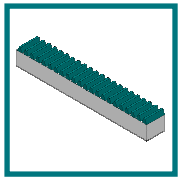

description	lubricant	volume	usage	part-no.
cartridge for FlexxPump 125	F14	125 cc	FlexxPump 125	000-114-101
cartridge for FlexxPump 125	F14	250 cc	FlexxPump 125	000-114-102
cartridge for FlexxPump 250	F14	250 cc	FlexxPump 250	000-114-103
cartridge for FlexxPump 400	F14	400 cc	FlexxPump 400	000-114-105
grease bellow for FlexxPump 1500	F14	1500 cc	FlexxPump 1500	000-114-115
tin	F14	1 kg		000-114-210
cartridge for hand press (DIN 1284)	F14	400 cc		000-114-220

description	lubricant	length	part-no.
tube 4x2,5	F14	5 m	102-011-024
tube 6x4	F14	2 m	134-023-014
tube 6x4	F14	5 m	134-053-014
tube 6x4	F14	10 m	134-003-014
tube 8x5	F14	2 m	134-028-014
tube 8x5	F14	5 m	134-058-014
tube 8x5	F14	10 m	134-008-014

Brackets for FlexxPump 125 & Distributor

Description:
Universal stainless steel bracket
for all types FlexxPump 125;
for easy assembly
rear structure;

Description:
Stainless steel brackets for all
types Flexx Pump 125; for
Splinter (grease);
different designs;
Splinters not im
Included in delivery;

Description:
Stainless steel brackets for all types FlexxPump 125;
for progressive distributor (grease); different designs;
progressive distributor not included;

Brackets for FlexxPump 400

Description:
Accessory bracket in stainless steel for all types FlexxPump 400;

With screws to attach the FlexxPump 400;

Different designs

FlexxPump 400 not included in delivery;

See dimension sheet for dimensions

Brackets for FlexxPump 125 & Splitter

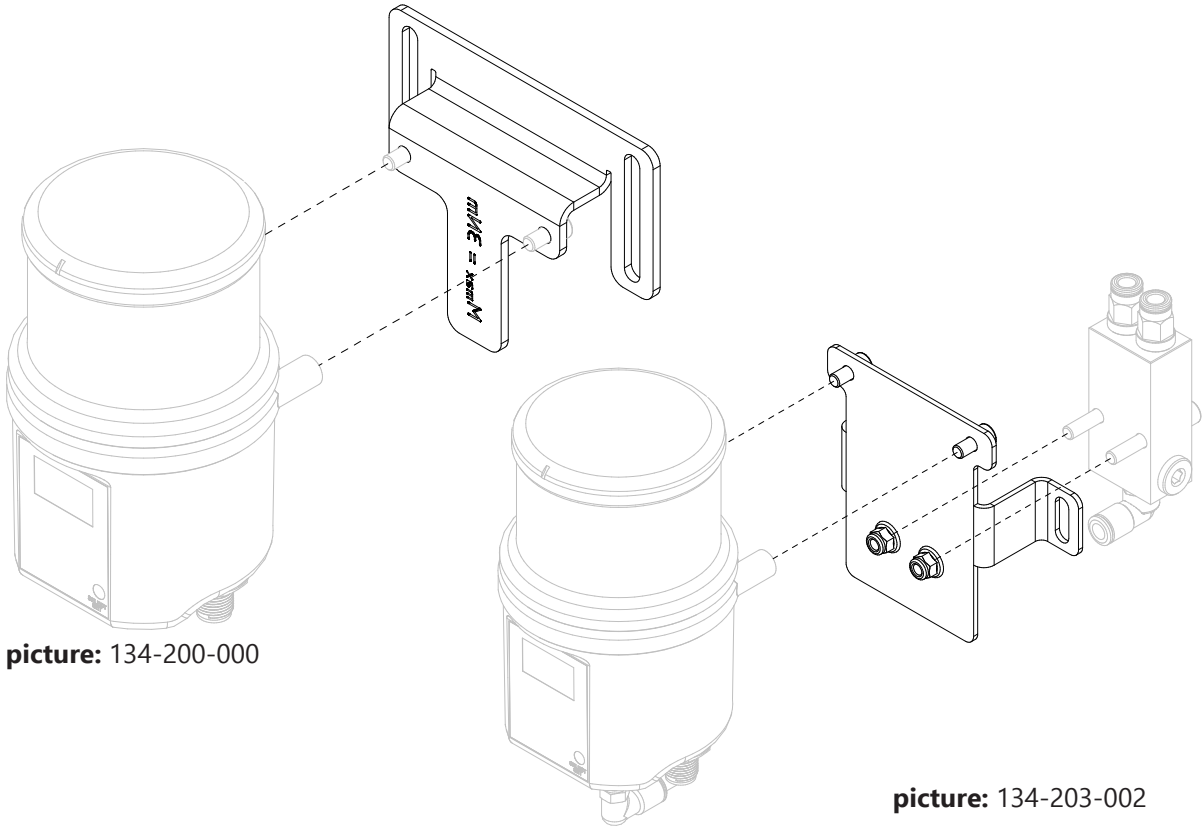

picture: 134-200-000

picture: 134-203-002

description	part-no.
brackets (stainless steel) for all types FlexxPump 125	134-200-000

description	type splitter	position splitter	part-no.
brackets (stainless steel) for FlexxPump 125 and 2-way Splitter	2-fach	behind	134-203-002
brackets (stainless steel) for FlexxPump 125 and 3-way Splitter	3-fach		134-203-003
brackets (stainless steel) for FlexxPump 125 and 4-way Splitter	4-fach		134-203-004

Brackets for FlexxPump 125 & progressiv distributor

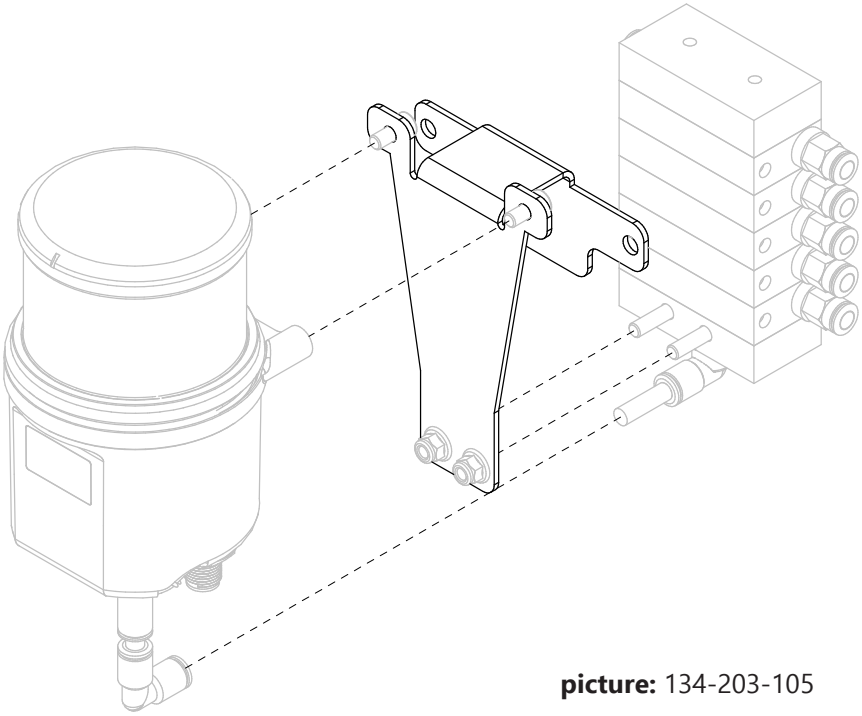

picture: 134-203-105

description	type PGV	position	part-no.
brackets (stainless steel) for FlexxPump 125 and PGV 2 outlets	2x (138-000-002)	behind	134-203-102
brackets (stainless steel) for FlexxPump 125 and PGV 3 outlets	3x (134-000-003)		134-203-103
brackets (stainless steel) for FlexxPump 125 and PGV 4 outlets	4x (134-000-004)		134-203-104
brackets (stainless steel) for FlexxPump 125 and PGV 5 outlets	5x (134-000-005)		134-203-105
brackets (stainless steel) for FlexxPump 125 and PGV 6 outlets	6x (134-000-006)		134-203-106
brackets (stainless steel) for FlexxPump 125 and PGV 7 outlets	7x (134-000-007)		134-203-107
brackets (stainless steel) for FlexxPump 125 and PGV 8 outlets	8x (134-000-008)		134-203-108
brackets (stainless steel) for FlexxPump 125 and PGV 9 outlets	9x (134-000-009)		134-203-109
brackets (stainless steel) for FlexxPump 125 and PGV 10 outlets	10x (134-000-010)		134-203-110

Brackets for FlexxPump 400

Typ 1

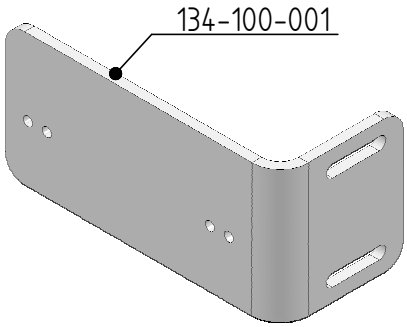

Typ 2

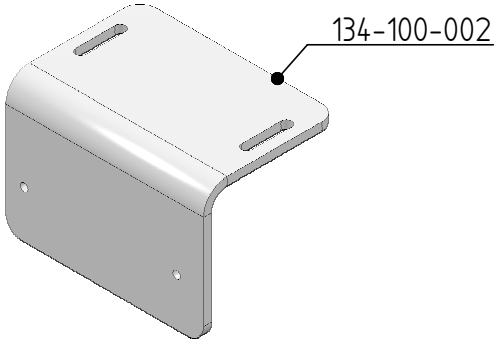

Typ 3

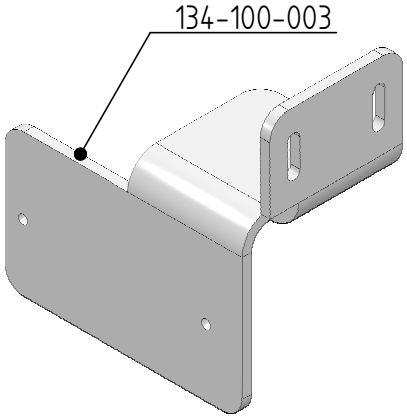

Typ 4

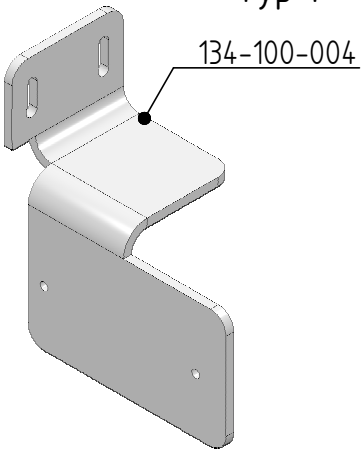

Typ 5

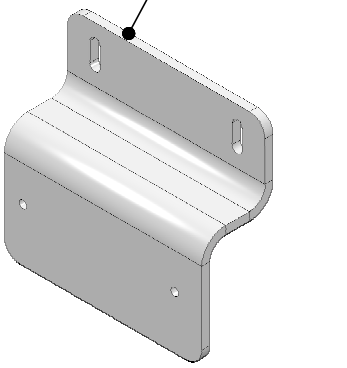

Brackets for FlexxPump 400

description	part-no.
accessory bracket type 1; for FlexxPump 400	134-100-001
accessory bracket type 2; for FlexxPump 400	134-100-002
accessory bracket type 3; for FlexxPump 400	134-100-003
accessory bracket type 4; for FlexxPump 400	134-100-004
accessory bracket type 5; for FlexxPump 400	134-100-005

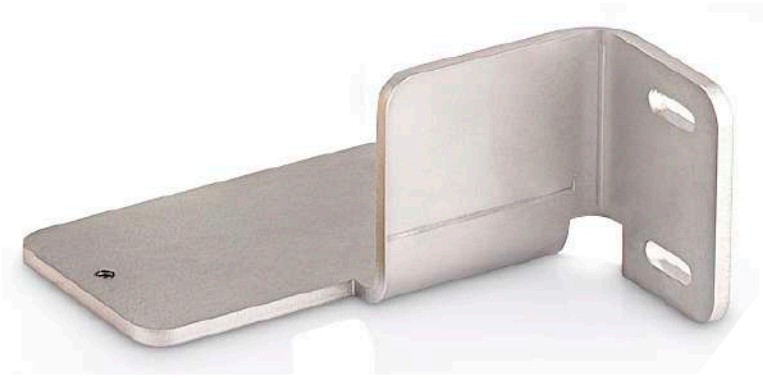

Sets
FlexxPump 125 & Splitter

type FlexxPump 125	position splitter	type brackets	type splitter	part-no.
FlexxPump 125 (135-125-100) time-controlled	type D behind	134-203-002	2x (134-005-102)	139-103-002
		134-203-003	3x (134-005-103)	139-103-003
		134-203-004	4x (134-005-104)	139-103-004
FlexxPump 125 DLS (135-125-210) pulse-controlled		134-203-002	2x (134-005-102)	139-203-002
		134-203-003	3x (134-005-103)	139-203-003
		134-203-004	4x (134-005-104)	139-203-004

Description:
Complete assembly sets pre-assembled;
incl. FlexxPump 125 (type: time- or pulse-controlled);
incl. stainless steel holder;
incl. splitter;
without lubricant

outlets of the splitter straight;
for tube 6 mm;
See dimension sheet for dimensions

Note on delivery:
The FlexxPump 125 and the splitter are vented with oil with H1 approval!

Sets
FlexxPump 125 & progressiv distributor

type FlexxPump 125	position PV	type brackets	type PV	part-no.
FlexxPump 125 (135-125-100) time-controlled	behind	134-203-102	2x (138-000-102)	139-103-102
		134-203-103	3x (138-000-103)	139-103-103
		134-203-104	4x (138-000-104)	139-103-104
		134-203-105	5x (138-000-105)	139-103-105
		134-203-106	6x (138-000-106)	139-103-106
		134-203-107	7x (138-000-107)	139-103-107
		134-203-108	8x (138-000-108)	139-103-108
		134-203-109	9x (138-000-109)	139-103-109
		134-203-110	10x (138-000-110)	139-103-110
FlexxPump 125 DLS (135-125-210) pulse-controlled	behind	134-203-102	2x (138-000-102)	139-203-102
		134-203-103	3x (138-000-103)	139-203-103
		134-203-104	3x (138-000-104)	139-203-104
		134-203-105	5x (138-000-105)	139-203-105
		134-203-106	6x (138-000-106)	139-203-106
		134-203-107	7x (138-000-107)	139-203-107
		134-203-108	8x (138-000-108)	139-203-108
		134-203-109	9x (138-000-109)	139-203-109
		134-203-110	10x (138-000-110)	139-203-110

Description:
Complete assembly sets pre-assembled;
incl. FlexxPump 125 (type: time- or pulse-controlled);
incl. stainless steel holder;
incl. progressive distributor;
without lubricant

Distributor outlets straight;
for tube 6 mm;
See dimension sheet for dimensions

Note on delivery:
The FlexxPump 125 and the progressive distributor are vented with oil with H1 approval !

Sets
PU-Lubrication Pinion with axis, straight

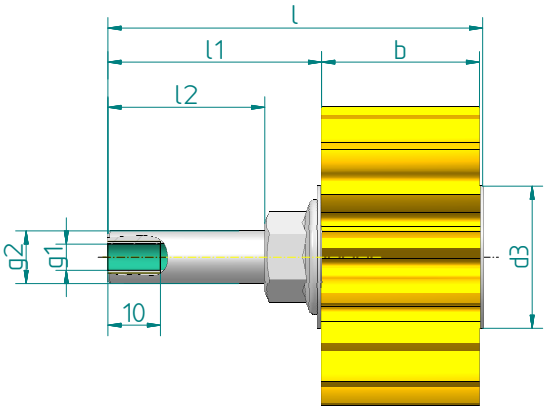

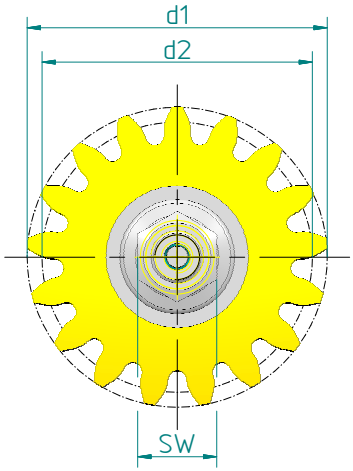

Description:
PU-Lubrication Pinion;
straight;
incl. sleeve and plain bearing;
with straight axis
toothing after DIN 867
with oil (H1 approval)
pre-oiled*

Material:
Pinion: open-cell PU foam;
axis: Steel nickel-plated

module	z	b	d1	d2	l	l1	l2	g1	g2	d3	sw	part-no.
1,5	24	15	39	36	60,4	44,6	34,0	M6	M10	27	15	150-152-421
2	17	20	38	34	61,2	40,4	29,8	M6	M10	27	15	150-021-721
3	17	30	57	51	71,2	40,4	29,8	M6	M10	27	15	150-031-721
4	17	40	76	68	81,2	40,4	29,8	M6	M10	27	15	150-041-721
5	17	50	95	85	116,4	65,5	48,9	G1/8	M16	60	24	150-051-721
6	17	60	114	102	126,4	65,5	48,9	G1/8	M16	60	24	150-061-721
8	17	80	152	136	146,4	65,5	48,9	G1/8	M16	60	24	150-081-721
10	17	100	190	170	186,4	65,5	48,9	G1/8	M16	60	24	150-101-721
12	8	120	120	96	186,4	65,5	48,9	G1/8	M16	60	24	150-120-721

*Alternatively also possible without H1 approval

Sets
PU-Lubrication Pinion with axis, right-angled

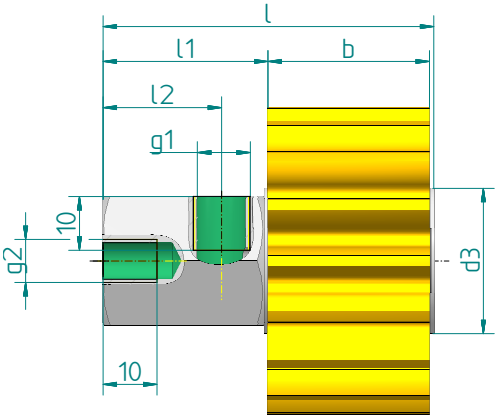

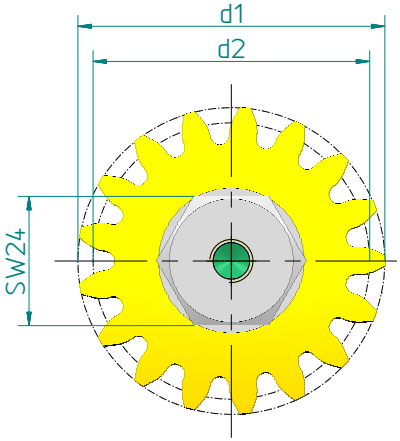

Description:
PU-Lubrication Pinion;
straight;
incl. sleeve and plain bearing;
with angled axis
toothing after DIN 867
with oil (H1 approval)
pre-oiled*

Material:
Pinion: open-cell PU foam;
axis: Steel nickel-plated

module	z	b	d1	d2	l	l1	l2	g1	g2	d3	sw	part-no.
1,5	24	15	39	36	60,4	30,6	22,0	G1/8	M8	27	24	150-152-411
2	17	20	38	34	61,2	30,6	22,0	G1/8	M8	27	24	150-021-711
3	17	30	57	51	71,2	30,6	22,0	G1/8	M8	27	24	150-031-711
4	17	40	76	68	81,2	30,6	22,0	G1/8	M8	27	24	150-041-711
5	17	50	95	85	116,4	30,6	22,0	G1/8	M8	60	24	150-051-711
6	17	60	114	102	126,4	30,6	22,0	G1/8	M8	60	24	150-061-711
8	17	80	152	136	146,4	30,6	22,0	G1/8	M8	27	24	150-081-711
10	17	100	190	170	166,4	30,6	22,0	G1/8	M8	100	24	150-101-711
12	8	120	120	96	186,4	30,6	22,0	G1/8	M8	100	24	150-120-711

*Alternatively also possible without H1 approval

Sets
PU-Lubrication Pinion RH with axis, straight

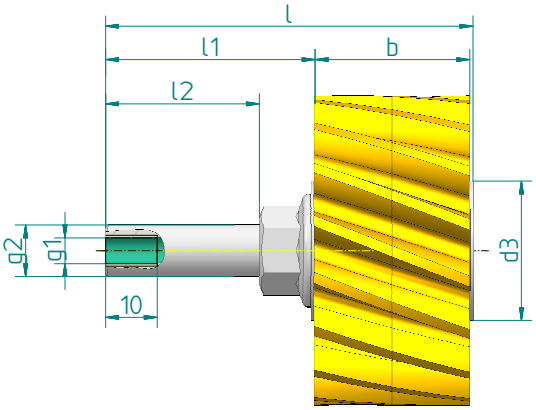

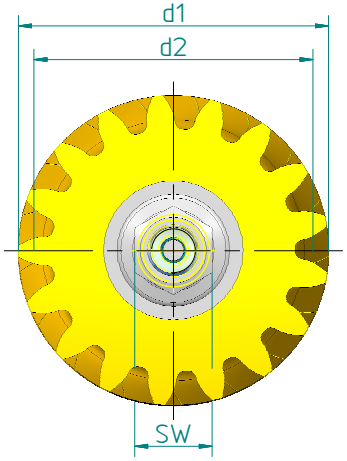

Description:
PU-Lubrication Pinion;
helical right;
incl. sleeve and plain bearing;
with straight axis
toothing after DIN 867
with oil (H1 approval)
pre-oiled*

Material:
Pinion: open-cell PU foam;
axis: Steel nickel-plated

module	z	b	d1	d2	l	l1	l2	g1	g2	d3	sw	ß	part-no.
1,5	24	15	41,2	38,2	60,4	44,6	34,0	M6	M10	27	15	19°31‘42‘‘	151-152-421
2	17	20	40,1	36,1	61,2	40,4	29,8	M6	M10	27	15	19°31‘42‘‘	151-021-721
3	17	30	60,1	54,1	71,2	40,4	29,8	M6	M10	27	15	19°31‘42‘‘	151-031-721
4	17	40	80,2	72,2	81,2	40,4	29,8	M6	M10	27	15	19°31‘42‘‘	151-041-721
5	17	50	100,2	90,2	116,4	65,5	48,9	G1/8	M16	60	24	19°31‘42‘‘	151-051-721
6	17	60	120,2	108,2	126,4	65,5	48,9	G1/8	M16	60	24	19°31‘42‘‘	151-061-721
8	17	80	160,3	144,3	146,4	65,5	48,9	G1/8	M16	60	24	19°31‘42‘‘	151-081-721
10	17	100	200,4	180,4	166,4	65,5	48,9	G1/8	M16	100	24	19°31‘42‘‘	151-101-721
12	8	120	125,9	101,9	186,4	65,5	48,9	G1/8	M16	100	24	19°31‘42‘‘	151-120-721

*Alternatively also possible without H1 approval

Sets
PU-Lubrication Pinion RH with axis, right-angled

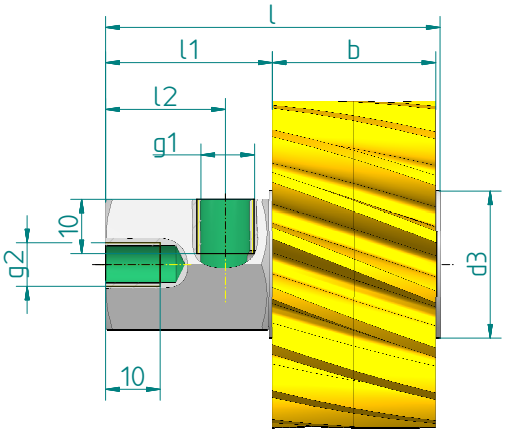

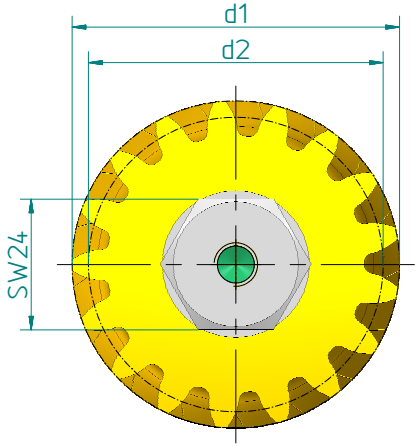

Description:
PU-Lubrication Pinion;
helical right;
incl. sleeve and plain bearing;
with straight axis
toothing after DIN 867
with oil (H1 approval)
pre-oiled*

Material:
Pinion: open-cell PU foam;
axis: Steel nickel-plated

module	z	b	d1	d2	l	l1	l2	g1	g2	d3	sw	ß	part-no.
1,5	24	15	39	36	60,4	30,6	22	G1/8	M8	27	24	19°31'42''	151-152-411
2	17	20	38	34	61,2	30,6	22	G1/8	M8	27	24	19°31'42''	151-021-711
3	17	30	57	51	71,2	30,6	22	G1/8	M8	27	24	19°31'42''	151-031-711
4	17	40	76	68	81,2	30,6	22	G1/8	M8	27	24	19°31'42''	151-041-711
5	17	50	95	85	116,4	30,6	22	G1/8	M8	60	24	19°31'42''	151-051-711
6	17	60	114	102	126,4	30,6	22	G1/8	M8	60	24	19°31'42''	151-061-711
8	17	80	152	136	146,4	30,6	22	G1/8	M8	60	24	19°31'42''	151-081-711
10	17	100	190	170	166,4	30,6	22	G1/8	M8	100	24	19°31'42''	151-101-711
12	8	120	120	96	186,4	30,6	22	G1/8	M8	100	24	19°31'42''	151-120-711

*Alternatively also possible without H1 approval

Sets
PU-Lubrication Pinion LH with axis, straight

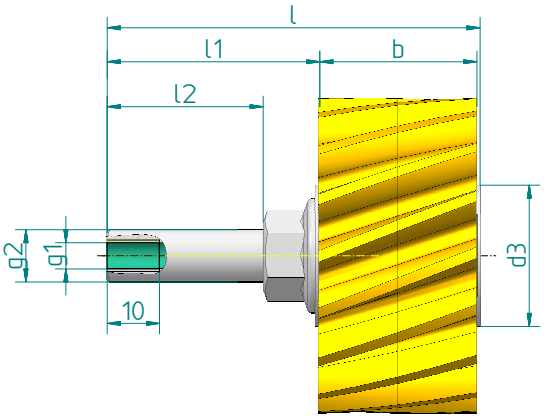

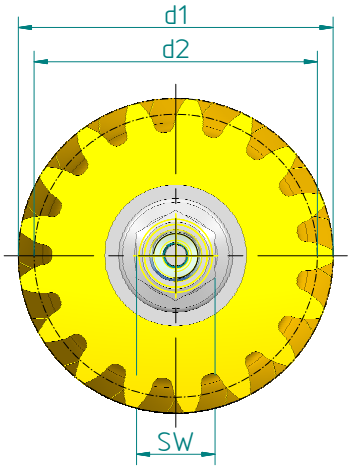

Description:
PU-Lubrication Pinion;
helical left;
incl. sleeve and plain bearing;
with straight axis
toothing after DIN 867
with oil (H1 approval)
pre-oiled*

Material:
Pinion: open-cell PU foam;
axis: Steel nickel-plated

module	z	b	d1	d2	l	l1	l2	g1	g2	d3	sw	ß	part-no.
1,5	24	15	41,2	38,2	60,4	44,6	34,0	M6	M10	27	15	19°31‘42‘‘	152-152-421
2	17	20	40,1	36,1	61,2	40,4	29,8	M6	M10	27	15	19°31‘42‘‘	152-021-721
3	17	30	60,1	54,1	71,2	40,4	29,8	M6	M10	27	15	19°31‘42‘‘	152-031-721
4	17	40	80,2	72,2	81,2	40,4	29,8	M6	M10	27	15	19°31‘42‘‘	152-041-721
5	17	50	100,2	90,2	116,4	65,5	48,9	G1/8	M16	60	24	19°31‘42‘‘	152-051-721
6	17	60	120,2	108,2	126,4	65,5	48,9	G1/8	M16	60	24	19°31‘42‘‘	152-061-721
8	17	80	160,3	144,3	146,4	65,5	48,9	G1/8	M16	60	24	19°31‘42‘‘	152-081-721
10	17	100	200,4	180,4	166,4	65,5	48,9	G1/8	M16	100	24	19°31‘42‘‘	152-101-721
12	8	120	125,9	101,9	186,4	65,5	48,9	G1/8	M16	100	24	19°31‘42‘‘	152-120-721

*Alternatively also possible without H1 approval

Sets
PU-Lubrication Pinion LH with axis, right-angled

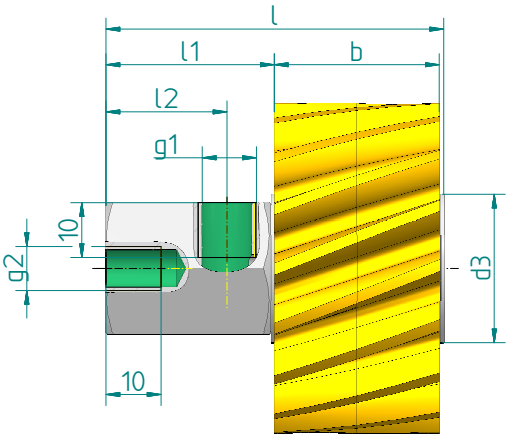

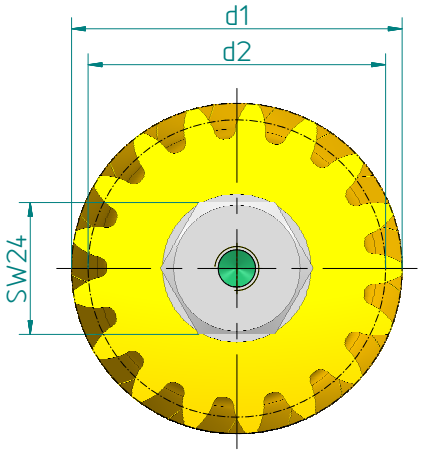

Description:
PU-Lubrication Pinion;
helical left;
with angled axis
toothing after DIN 867
with oil (H1 approval)
pre-oiled*

Material:
Pinion: open-cell PU foam;
axis: Steel nickel-plated

module	z	b	d1	d2	l	l1	l2	g1	g2	d3	sw	ß	part-no.
1,5	24	15	39	36	60,4	30,6	22	G1/8	M8	27	24	19°31‘42‘‘	152-152-411
2	17	20	38	34	61,2	30,6	22	G1/8	M8	27	24	19°31‘42‘‘	152-021-711
3	17	30	57	51	71,2	30,6	22	G1/8	M8	27	24	19°31‘42‘‘	152-031-711
4	17	40	76	68	81,2	30,6	22	G1/8	M8	27	24	19°31‘42‘‘	152-041-711
5	17	50	95	85	116,4	30,6	22	G1/8	M8	60	24	19°31‘42‘‘	152-051-711
6	17	60	114	102	126,4	30,6	22	G1/8	M8	60	24	19°31‘42‘‘	152-061-711
8	17	80	152	136	146,4	30,6	22	G1/8	M8	60	24	19°31‘42‘‘	152-081-711
10	17	100	190	170	166,4	30,6	22	G1/8	M8	100	24	19°31‘42‘‘	152-101-711
12	8	120	120	96	186,4	30,6	22	G1/8	M8	100	24	19°31‘42‘‘	152-120-711

*Alternatively also possible without H1 approval

Accessories FlexxPump 125 B & 400 B

description	part-no.
Battery for FlexxPump 125 B; 4,5 V; Alkaline	134-002-025
Battery for FlexxPump 400 B; 6 V; Alkaline	134-002-028
Cable M12x1 with red LED; 5 m; only for FlexxPump 125 B / 400 B with M12x1-plug	134-002-016
Cable M12x1 with red LED; 10 m; only for FlexxPump 125 B / 400 B with M12x1-plug	134-002-017
Special cleaner R01; 500 ml; for racks	000-301-305

Picture:
Cable M12x1;
with red LED

Picture:
Special cleaner R01

Accessories FlexxPump 125, 400 & 1500 24 V DC

description	part-no.
Cable M12x1; straight plug; 4-pole; open end; 5 m	134-002-003
Cable M12x1; straight plug; 4-pole; open end; 10 m	134-002-007
Cable M12x1; angled plug with LED; 4-pole; open end; 5 m	134-002-014
Cable M12x1; angled plug with LED; 4-pole; open end; 10 m	134-002-015
Diagnosis and control unit; FlexxCheck for FlexxPump 400/500 DLS; without power supply	20038756
Power pack 230 V AC / 24 V DC - 0.6 A: Input power cable 1.8 m long; Output 1.8 m connection cable with M12x1 plug	134-002-011

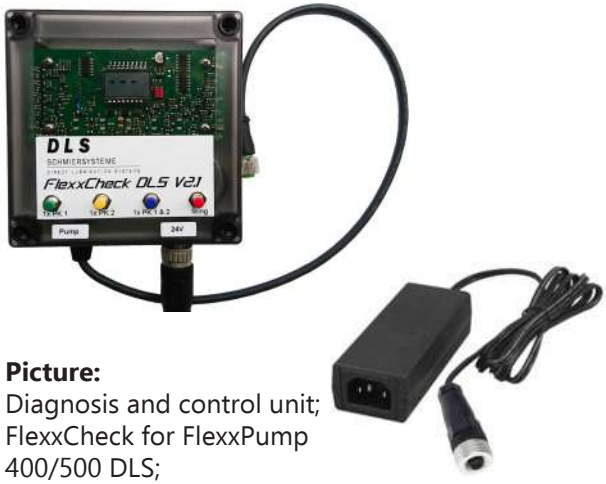

Picture:
Diagnosis and control unit;
FlexxCheck for FlexxPump
400/500 DLS;
without power supply

Power pack
230 V AC / 24 V DC - 0.6
A: Input power cable 1.8 m
long;
Output 1.8 m connection
cable with M12x1 plug

Picture:
Cable M12x1;
angled plug with LED; 4-pole
open end

Picture:
Cable M12x1;
straight plug; 4-pole
open end

Tubes

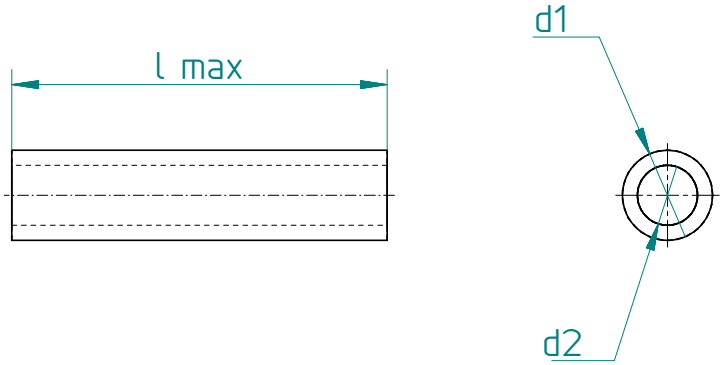

Description:
Tubes empty or pre-filled with lubricant;
Different lengths and diameters
Max. Pressure 90 bar (at 20 °C)

Material:
PA; black

tube	d1	d2	l max.	description	part-no.
empty	4	2,5	25 m	tube black; by meter	134-004-003
	6	4	50 m	tube black; by meter	134-004-001
	8	5	50 m	tube black; by meter	134-004-005

accessories	part-no.
tube cutter	134-002-002

Lubrication charts
Linear guide and ball screw with FP1510 DLS

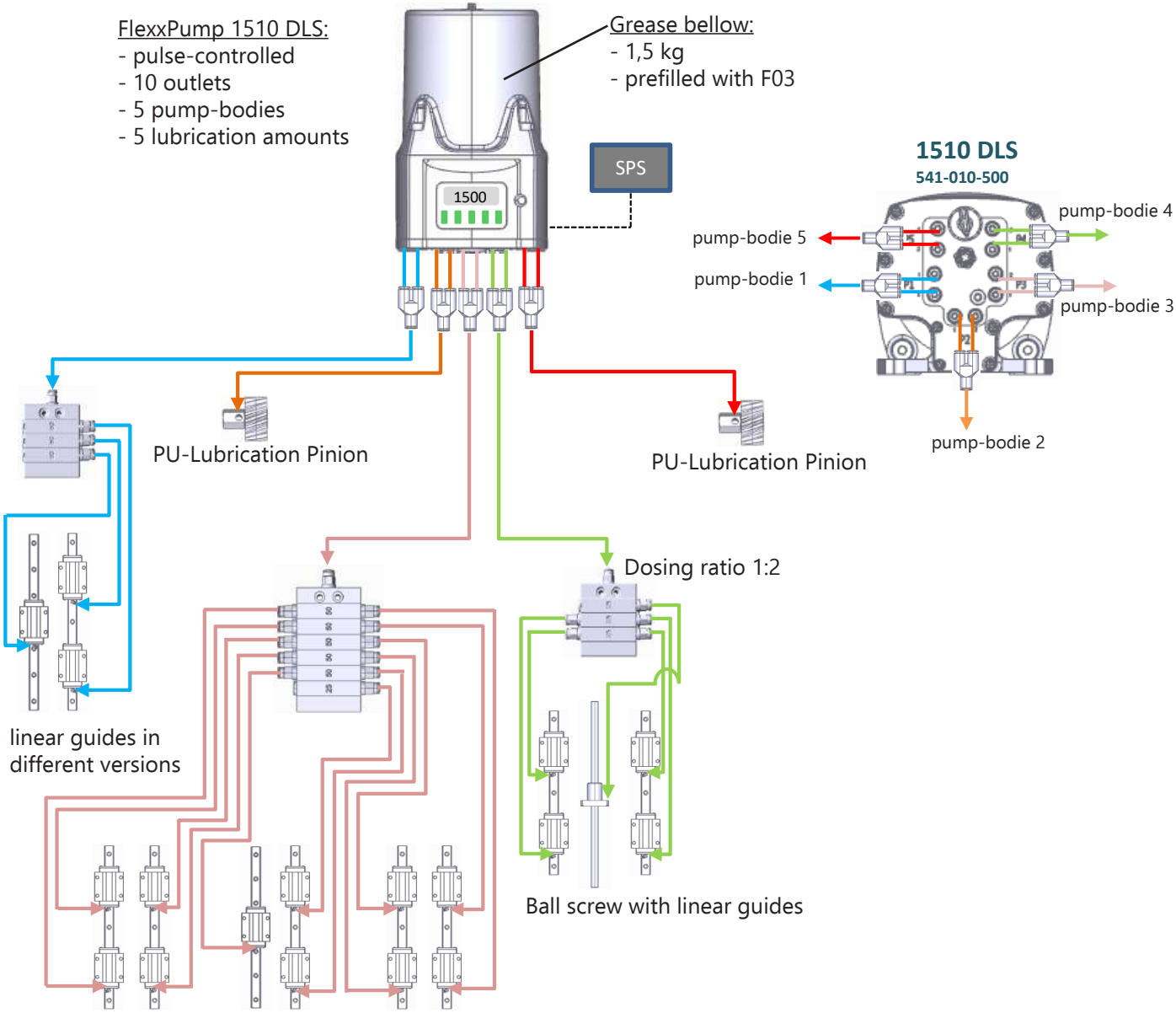

Lubrication charts
Rack and Pinion drive with linear guide

Lubricant dispenser
- for 2 different lubrication amounts;
- pulse-controlled;
- max. pressure 70 bar;
- dosing volume min. 0,15 cc

Cartridge
- F03 400 cm³;
- for linear guides
- and Rack and Pinion drives

High pressure tube:
- black; 6x4;
- suitable for drag chains;
- smallest bending radius 30 mm

Aluminum-progressiv distributor
- for tube diameter 6 mm;
- tube connectors straight;
- max. pressure 100 bar
- also with circulation monitoring available

Tube lengths:
- till Distributor 2 m
- after Distributor 6 m
- without Distributor 8 m

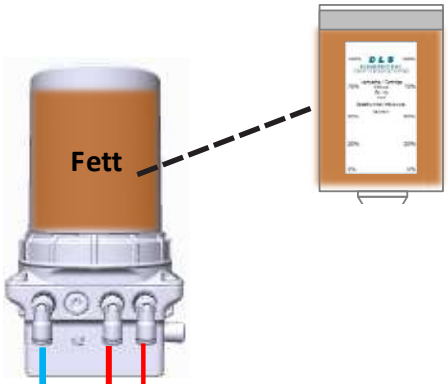

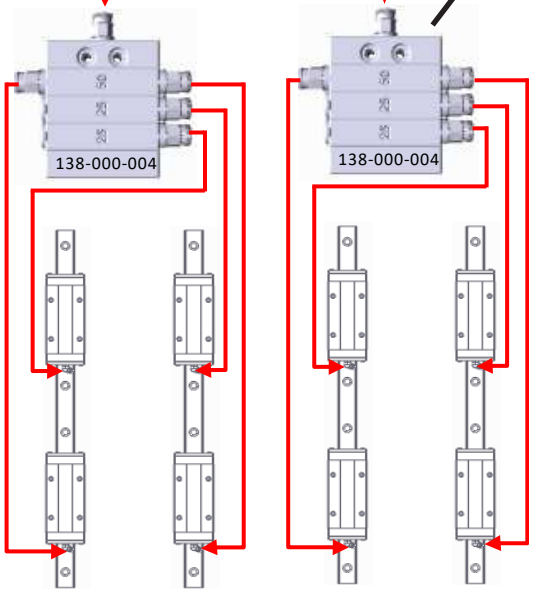

Lubrication Pinion with Mounting-axis
- usable from -30 °C ... +120 °C;
- Geometry freely selectable

Lubrication charts
Rack and Pinion drive with linear guide FP125

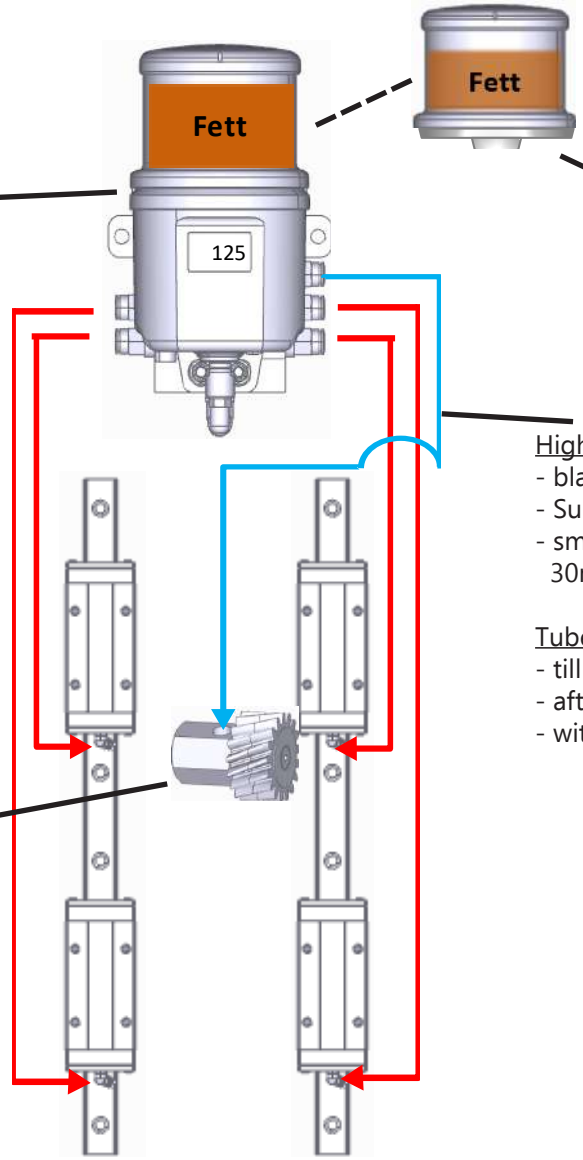

Lubricant dispenser
- pulse-controlled;
- max. pressure 70 bar;
- dosing volume min. 0,15 cc

Cartridge
- F03 125 cm^3;
- for linear guides
- and Rack and Pinion drives

High pressure tube:
- black; 6x4;
- Suitable for drag chains;
- smallest bending radius 30mm

Tube lengths:
- till Distributor 2 m
- after Distributor 4 m
- without Distributor 6 m

Lubrication Pinion with Mounting-axis
- usable from -30 °C ... +120 °C;
- Geometry freely selectable

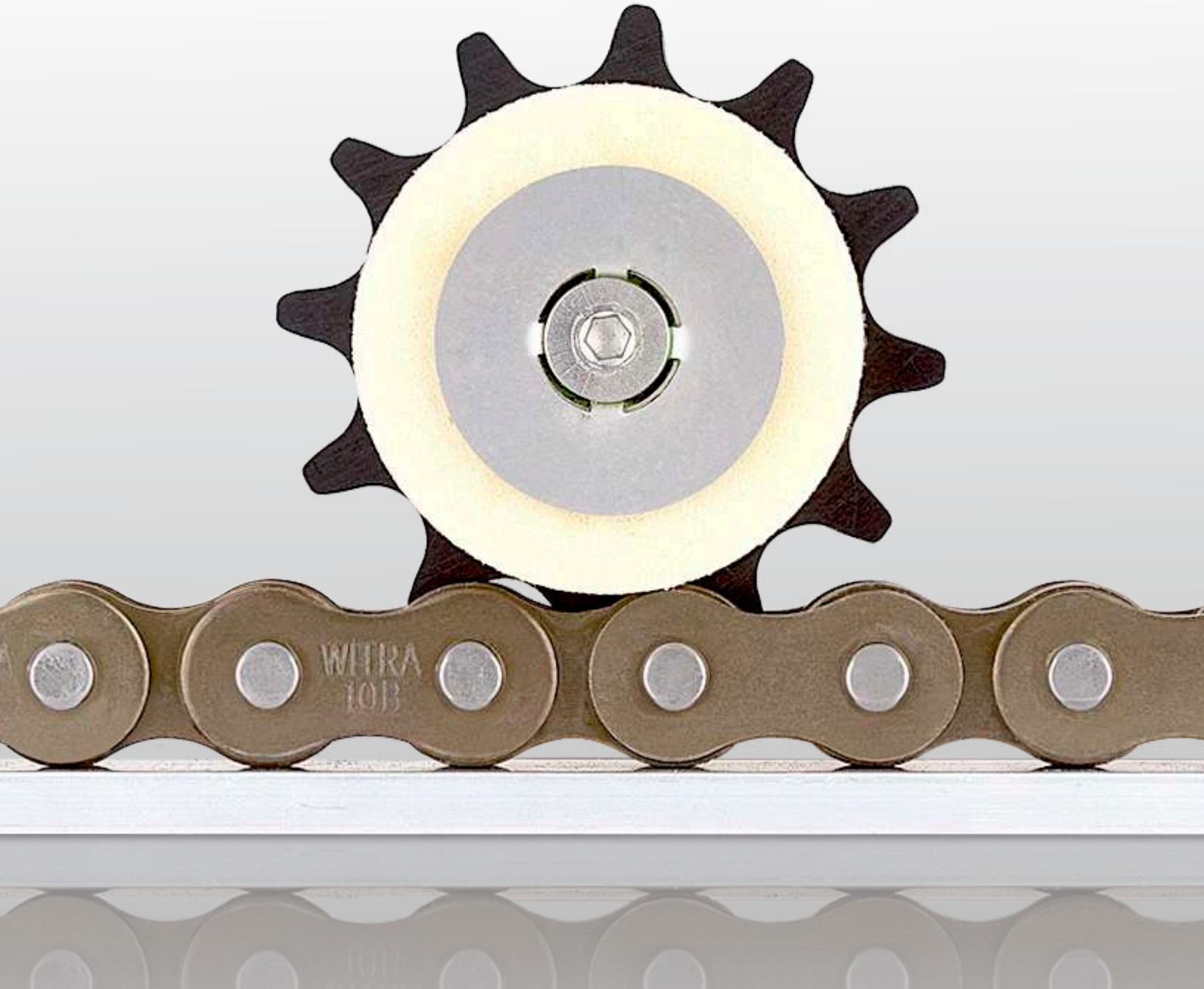
WEIRA
10B

Oil lubrication

Oil lubrication is suitable for many applications, as it can be adapted to the operating conditions and structural conditions.

When selecting a suitable oil lubrication method for a bearing arrangement, the following requirements must be taken into account:

+ required amount and viscosity of the oil
+ Speed and hydrodynamic friction losses
+ permissible storage temperature

Chain lubrication

PU-Lubrication Sprocket

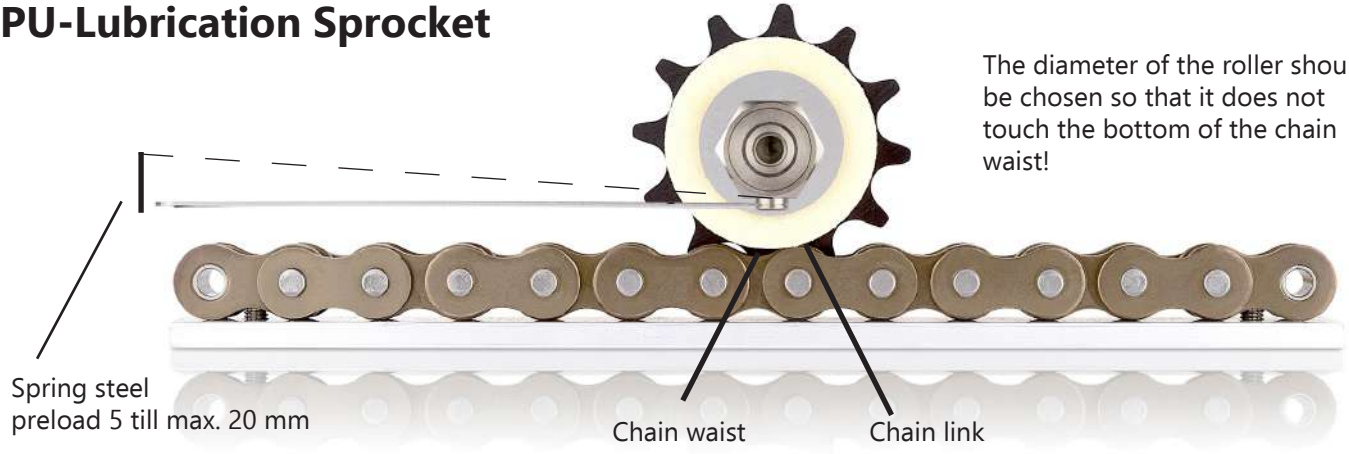

The diameter of the roller should be chosen so that it does not touch the bottom of the chain waist!

PU-Lubrication Roll

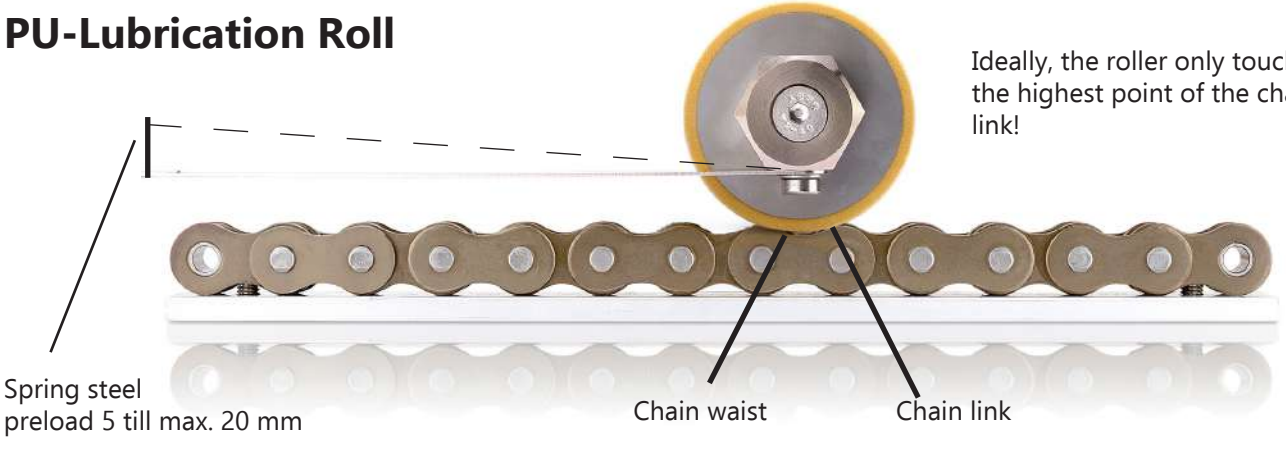

Ideally, the roller only touches the highest point of the chain link!

Special design:
For example: PU-Lubrication Roll for an accumulation chain

In this example, the roller outside diameter is **not** lubricated.

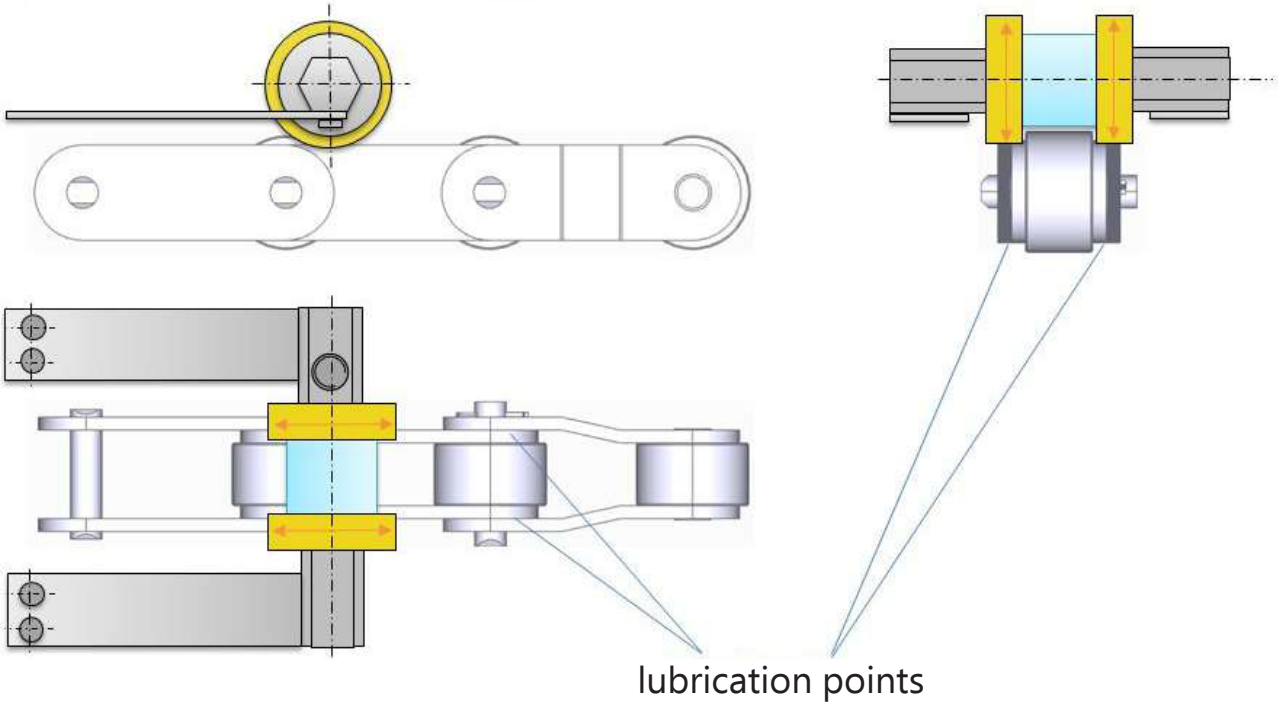

FlexxPump 125 & FlexxPump 125 DLS

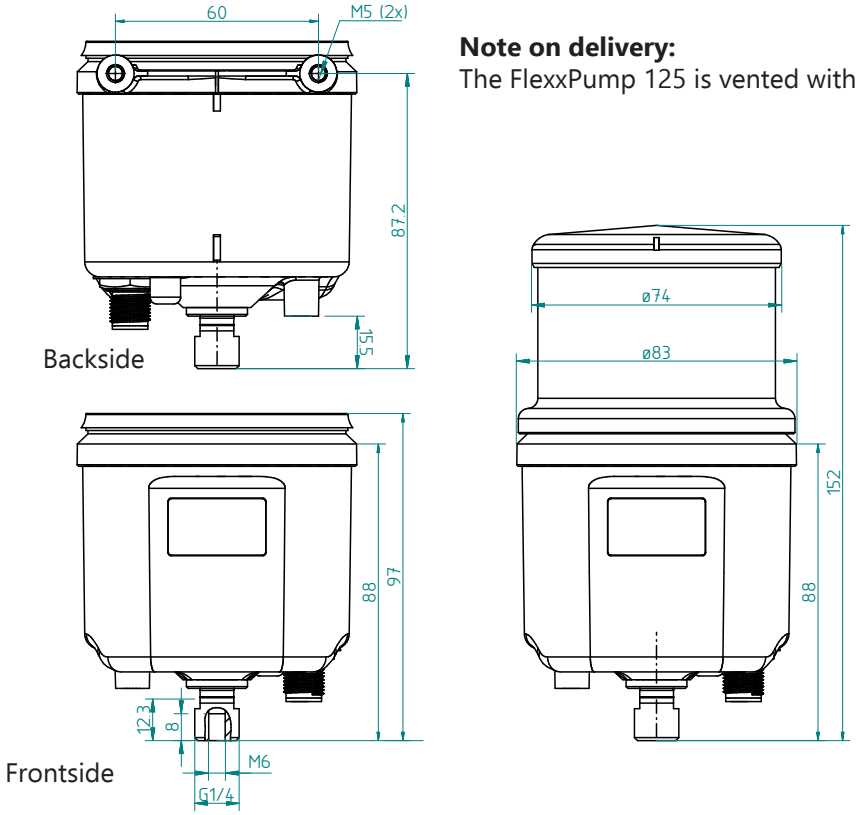

Note on delivery:
The FlexxPump 125 is vented with Grease F02 on delivery

type	variant	outlets	double-pump bodies	lubrication points	M12x1 plug	part-no.
125	24 V DC time-controlled	1	1	max. 4* / 10**	++	135-125-100
125 DLS	24 V DC pulse-controlled	1	1	max. 4* / 10**	++	135-125-210

* when using distributors / splitter
** when using distributors more lubrication points are possible!

Controlled minimum quantity lubrication for oil 24V DC

function:	piston pump
lubricant volume:	125 / 250 cc (in cartridge)
volume per stroke:	0,15 cc per outlet
number of pump strokes per cartridge 125 / 250 cc:	ca. 780 / 1560
operating pressure:	50 bar
lubricant:	oil
operating temperatur:	-10°C ... +60°C
number of outlets:	1
thread outlet:	G1/4"(a) and M6(i)
operating voltage:	24 V DC (via cable)
connector:	M12 x 1, 4-pole
current consumption 24 V DC:	Imax. 350 mA
assembly:	Backside M5(i) (2x) or downside M5(i) with G1/4"(a) or DLS accessories
mounting position:	perpendicular, cartridge up
control:	integrated microelectronic SPS (#135-125-210)
running-time:	1 till max. 36 months (time-controlled)
max. amount per cycle:	max. 1,50 cc
pressure monitoring:	integrated, electronic
level monitoring:	integrated, electronic
error message:	time-controlled: optical LCD pulse-controlled: SPS
error acknowledgment:	SPS (#135-125-210)
filling function:	available
protection class:	IP 54
housing material:	PA 6.6-GF 30 / POM

Ideal for single or combined relubrication of:

+ chains
+ open gears
+ rails for rollers

FlexxPump 500 DLS

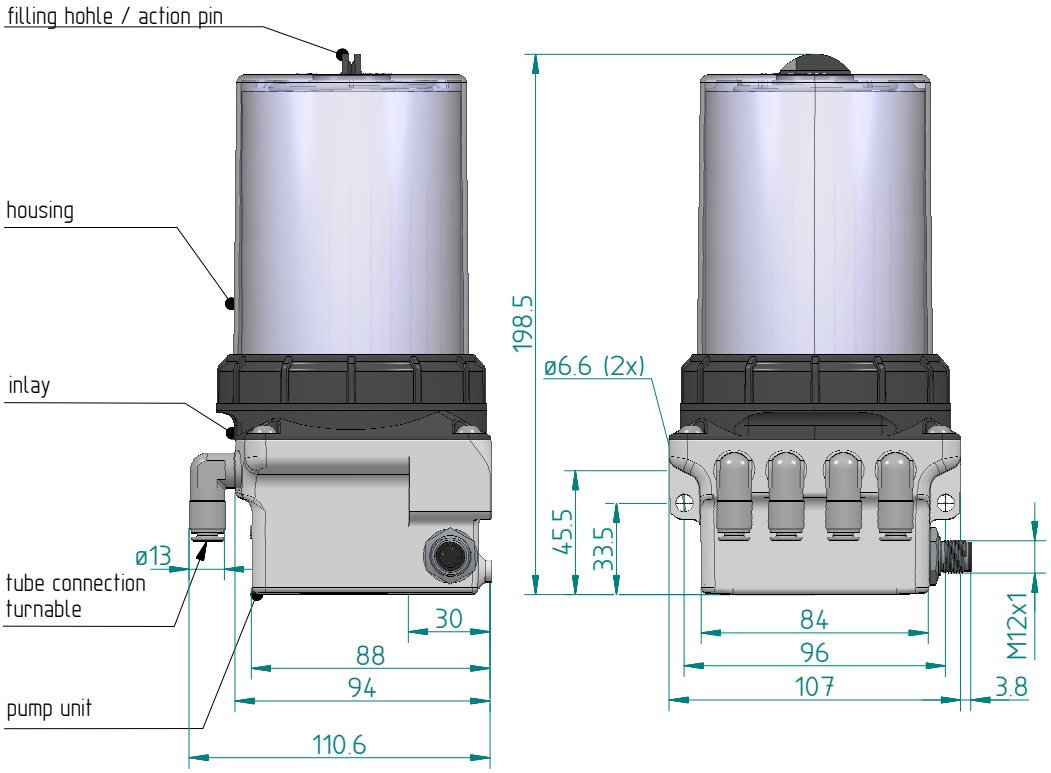

type	variant	outlets	double-pump bodies	lubrication points	lubrication amounts	part-no.
511 DLS	pulse-controlled	1	1	max. 4* / 10 **	1	235-511-210
512 DLS		2	1	max. 8* / 20**	1	235-512-210
522 DLS		2 (1+1)	2	max. 8* / 20**	2	235-522-210
523 DLS		3 (1+2)	2	max. 12* / 30**	2	235-523-210
524 DLS		4 (2+2)	2	max. 16* / 40**	2	235-524-210

* when using distributors / splitter
** when using distributors more lubrication points are possible!

Controlled minimum quantity lubrication for oil 24 V DC pulse-controlled

function:	piston pump
lubricant volume:	oil, 400 ml (filled in directly)
volume per stroke:	0,15 cc per outlet
number of pump strokes per filling 400ml:	ca. 2600
operating pressure:	70 bar
lubricant:	oil, solid particles possible
operating temperatur:	-10°C ... +60°C
number of outlets:	max. 4, right-angled, turnable
operating voltage:	24 V DC (via cable)
connector:	M12 x 1, 4-pole
current consumption 24 V DC:	Imax. 350 mA
mounting position:	perpendicular
control:	integrated, microelectronic
max. amount per cycle:	4,50 cc
pressure monitoring:	integrated, electronic
level monitoring:	integrated, reedcontact
error message:	SPS error message
optional:	angled plug with integrated LED (see accessories)
protection class:	IP 54
housing material:	zinc, polyamide

Ideal for single or combined relubrication of:

+ chains
+ open gears
+ rails for rollers

FlexxPump 500

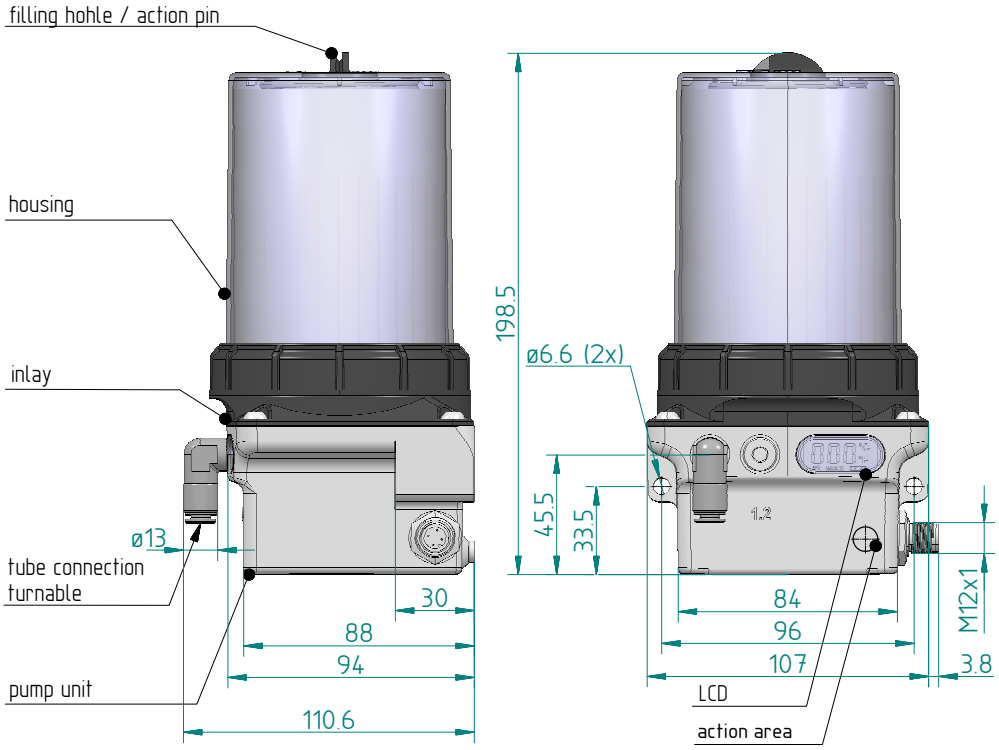

2 setting modes:

E_t = emptying time: 1 - 36 months
+ C: 1 - 30 cycles

h = break time: 1 - 240 h
+ C: 1 - 30 cycles

type	variant	outlets	double-pump bodies	lubrication points	lubrication amounts	part-no.
511	24 V DC time-controlled	1	1	max. 4* / 10 **	1	235-511-100
512		2	1	max. 8* / 20**	1	235-512-100

* when using distributors / splitter
** when using distributors more lubrication points are possible!

Controlled minimum quantity lubrication for oil 24 V DC time-controlled

function:	piston pump
lubricant volume:	oil, 400 ml (filled in directly)
volume per stroke:	0,15 cc per outlet
number of pump strokes per filling 400ml:	ca. 2600
operating pressure:	70 bar
lubricant:	oil, solid particles possible
operating temperatur:	-10°C ... +60°C
number of outlets:	max. 2, right-angled, turnable
operating voltage:	24 V DC (via cable)
connector:	M12 x 1, 4-pole
current consumption 24 V DC:	Imax. 350 mA
mounting position:	perpendicular
control:	integrated, microelectronic
running-time:	1 till max. 36 months
max. amount per cycle:	4,50 cc
pressure monitoring:	integrated, electronic
level monitoring:	integrated, reedcontact
error message:	optical LCD
optional:	angled plug with integrated LED (see accessories)
protection class:	IP 54
housing material:	zinc, polyamide

Ideal for single or combined relubrication of:

+ chains
+ open gears
+ rails for rollers

FlexxPump 500 B

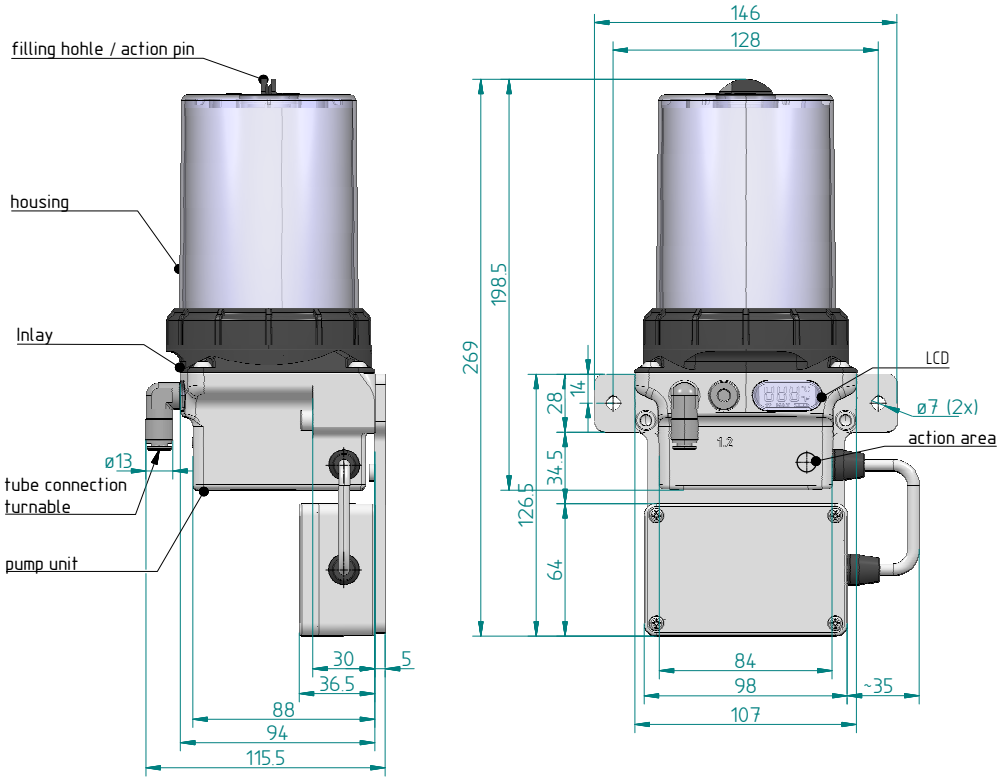

2 setting modes:

E_t = emptying time: 1 - 36 months h = break time: 1 - 240 h
+ C: 1 - 30 cycles + C: 1 - 30 cycles

type	variant	outlets	double-pump bodies	lubrication points	lubrication amounts	part-no.
511 B	battery time-controlled	1	1	max. 4*	1	235-511-000
512 B		2	1	max 8*	1	235-512-000

* when using distributors / splitter
With external battery compartment. Battery is not included.

Controlled minimum quantity lubrication for grease, battery operated

function:	piston pump
lubricant volume:	oil, 400 ml (filled in directly)
volume per stroke:	0,15 cc per outlet
number of pump strokes per filling 400ml:	ca. 2600
operating pressure:	50 bar
lubricant:	oil, solid particles possible
operating temperatur:	-10°C ... +60°C
number of outlets:	max. 2, right-angled, turnable
battery voltage:	6 V
mounting position:	perpendicular
control:	integrated, microelectronic
running-time:	1 till max. 36 months
max. amount per cycle:	4,50 cc
pressure monitoring:	integrated, electronic
level monitoring:	integrated, reedcontact
error message:	optical LCD
protection class:	IP 54
housing material:	zinc, polyamide

Ideal for single or combined relubrication of:

+ chains
+ open gears
+ rails for rollers

FlexxPump 2000

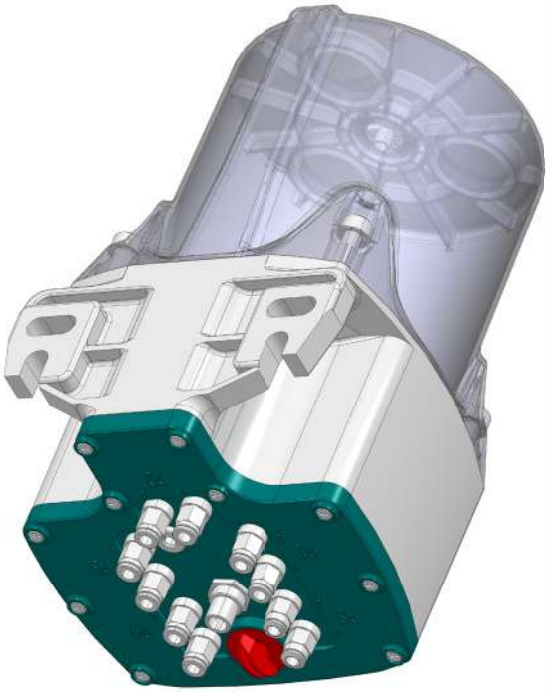

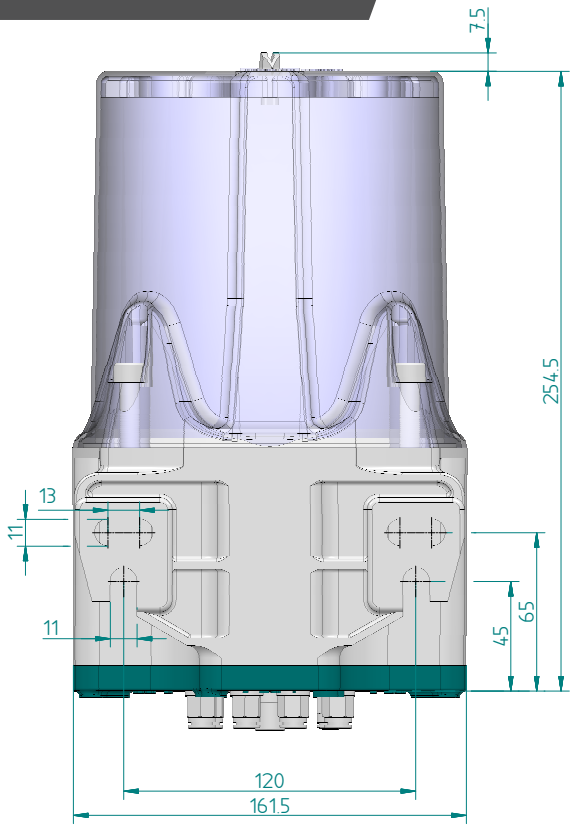

type	variant	outlets	double-pump bodies	lubrication amounts	part-no.
2002 DLS	pulse-controlled time-controlled	2	1	1	550-202-100
2004 DLS		4	2	2	550-404-200
2006 DLS		6	3	3	550-606-300
2008 DLS		8	4	4	550-808-400
2010 DLS		10	5	5	551-010-500
Combination of outlets with Y-tube connector 134-002-000 possible!					

Controlled minimum quantity lubrication for oil 24 V DC

function:	piston pump
lubricant volume:	oil, 2000 cc (filled in directly)
volume per stroke:	0,15 cc per outlet
number of pump strokes:	ca. 12500
operating pressure:	70 bar
lubricant:	oil solid particles possible
operating temperatur:	-10°C ... +60°C
number of outlets:	max. 10, straight
operating voltage:	24 V DC (via cable)
connector:	M12 x 1, 4-pole
current consumption 24 V DC:	Imax. 350 mA
mounting position:	perpendicular
control:	integrated, microelectronic
running-time:	1 till max. 36 months (time-controlled)
max. amount per cycle:	4,50 cc
pressure monitoring:	integrated, electronic
level monitoring:	integrated, reedcontact
error message:	pulse-controlled: SPS time-controlled: optical LCD
optional:	angled plug with integrated LED (see accessories)
protection class:	IP 54
housing material:	aluminum, polyamide

Ideal for single or combined relubrication of:

+ chains
+ open gears

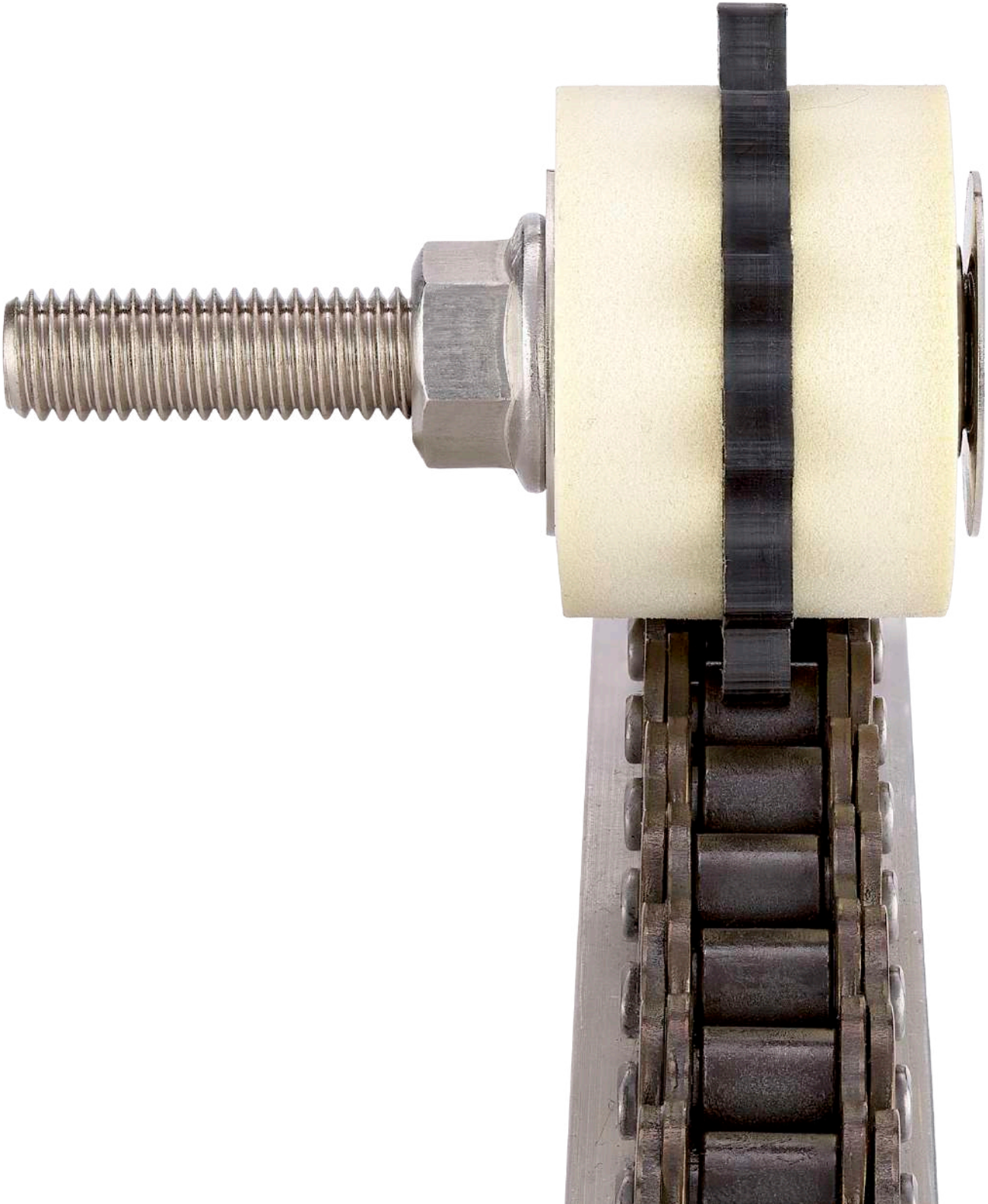

PU-Lubrication Sprocket

The rollers made of open-cell PU foam transfer the lubricant selectively to the surface of the link plates of roller chains. The mechanical power to drive the rollers is ensured by a low-wear plastic Pinion.

The open-cell polyurethane foam material used for the lubricating gears ensures that the chains are optimally supplied over very long periods of time.

The material stores the lubricant and releases it again in very small dosages.

Over-lubrication is avoided, as is wear due to insufficient lubrication.

The PU lubrication sprockets are available for simplex, duplex and triplex chains with and without spring steel, depending on the size. The optimal contact pressure of the lubricating Pinion can be individually adjusted using a tensioning element. With the tensioning element, absorb also vibrations and shocks.

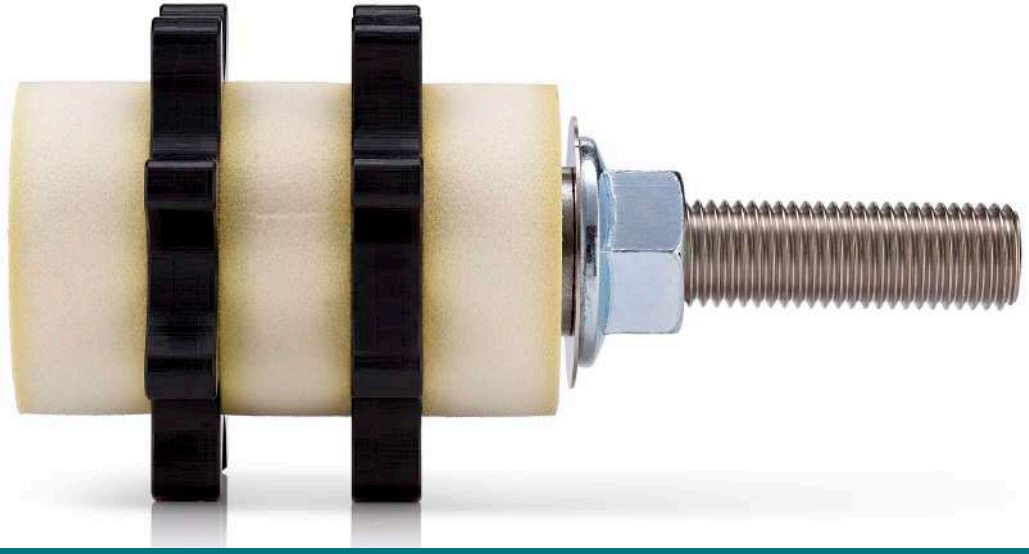

PU-Lubrication Sprocket simplex - with axis

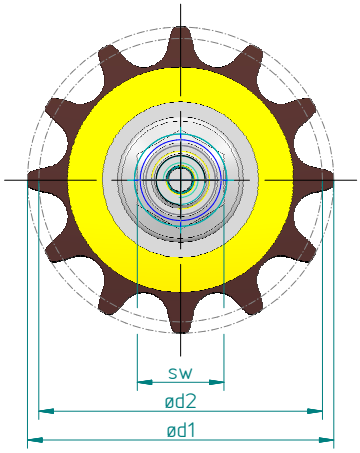

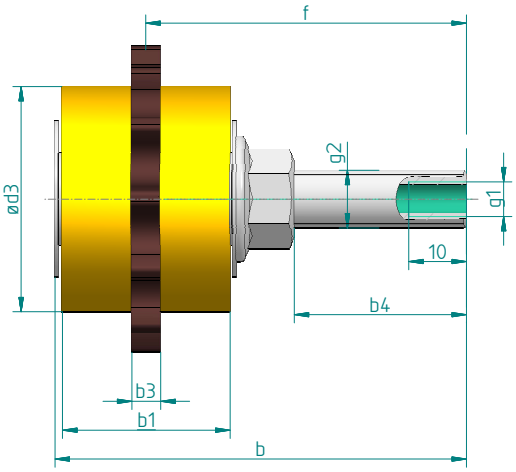

Description:
PU-Lubrication Sprocket for simplex roller chain; mounted on straight axis; plain bearings;

Material:
Sprocket: PA;
axis: Steel nickel-plated;
Roll: PU-foam;

mounting position:
arbitrary

DIN 8187-1/ 8188-1	z	b	b1	d1	d2	d3	f	b3	b4	g1	g2	sw	part-no.
08B-1	12	71,2	29	53	49,1	39	55,5	5	30,0	M6	M10	15	136-201-012
10B-1	10	71,2	29	55	51,4	39	55,5	5	30,0	M6	M10	15	136-301-010
12B-1	8	71,2	29	55	49,8	36	55,5	5	30,0	M6	M10	15	136-401-008
16B-1	8	81,2	40	75	66,4	48	60,5	10	30,0	M6	M10	15	136-501-008
20B-1	8	116,4	50	90	83,0	59	90,7	10	49,1	M10x1	M16	24	136-601-008
24B-1	10	126,4	60	138	123,3	93	95,7	20	49,1	M10x1	M16	24	136-701-010
28B-1	8	146,4	80	140	116,2	81	105,7	20	49,1	M10x1	M16	24	136-801-008
32B-1	8	146,4	80	150	132,8	93	105,7	20	49,1	M10x1	M16	24	136-901-008

PU-Lubrication Sprocket simplex - with spring steel

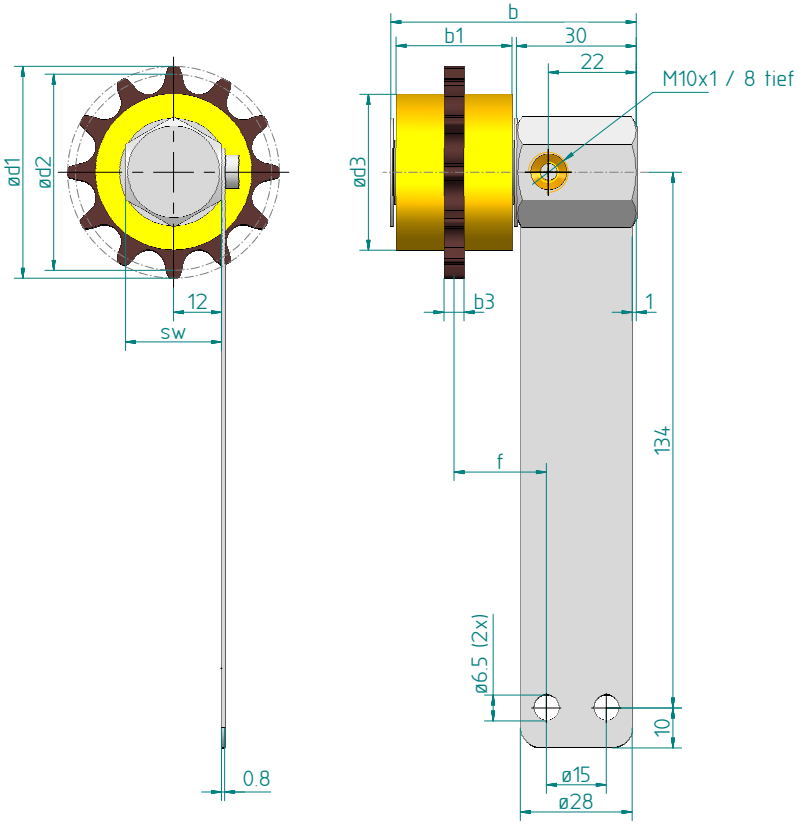

Description:
PU-Lubrication Sprocket for simplex-roller chain; mounted on angled axis; with spring steel; plain bearings;

Material:
Sprocket: PA;
axis: Steel nickel-plated;
Roll: PU-foam;

mounting position:
arbitrary

Spring steel and screws enclosed loose.

DIN 8187-1 / 8188-1	z	b	b1	d1	d2	d3	b3	f	sw	part-no.
08B-1	12	61,4	29	53	49,1	39	5	23,2	24	136-201-112
10B-1	10	61,4	29	55	51,4	39	5	23,2	24	136-301-110
12B-1	8	61,4	29	55	49,8	36	5	23,2	24	136-401-108
16B-1	8	71,4	40	75	66,4	48	10	28,2	24	136-501-108
20B-1	8	81,4	50	90	83,0	59	10	33,2	24	136-601-108

PU-Lubrication Sprocket simplex - angled axis and double spring steel

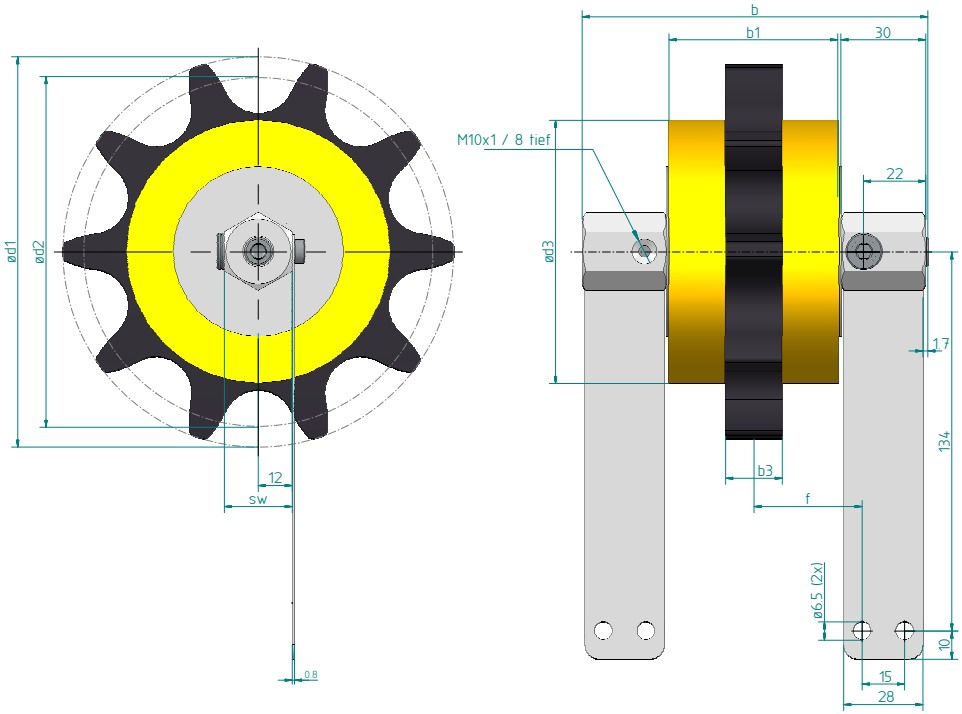

Description:
PU-Lubrication Sprocket for simplex-roller chain;
mounted on angled axis; with spring steel;
plain bearings;

Material:
Sprocket: PA;
axis: Steel nickel-plated;
Roll: PU-foam;

mounting position:
arbitrary

Spring steel and screws enclosed loose.

DIN 8187-1 / 8188-1	z	b	b1	d1	d2	d3	b3	f	sw	part-no.
24B-1	10	122,1	60	138	123,3	93	20	38,2	24	136-701-110
28B-1	8	142,1	80	140	116,2	81	20	48,2	24	136-801-108
32B-1	8	142,1	80	150	132,8	93	20	48,2	24	136-901-108

PU-Lubrication Sprocket duplex - straight axis

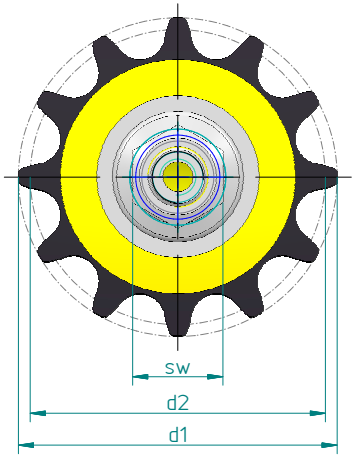

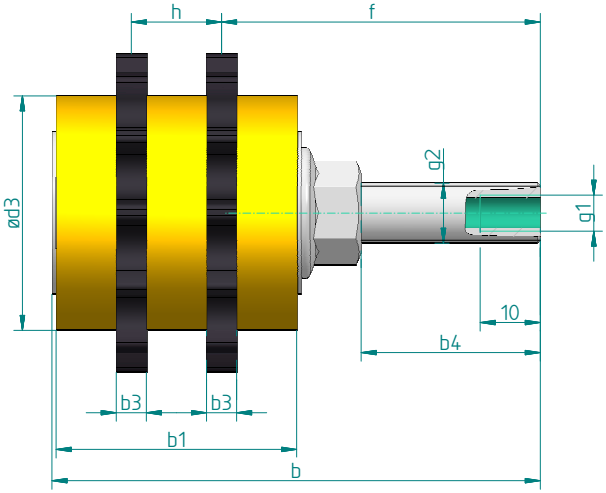

Description:
PU-Lubrication Sprocket for duplex-roller chain;
mounted on straight axis;
plain bearings;

Material:
Sprocket: PA;
axis: Steel nickel-plated;
Roll: PU-foam;

mounting position:
arbitrary

DIN 8187-1/ 8188-1	z	b	b1	d1	d2	d3	f	h	b3	b4	g1	g2	sw	part-no.
08B-2	12	81,2	40	53	49,1	39	53,0	15	5	30,0	M6	M10	15	136-202-012
10B-2	10	81,2	40	55	51,4	39	53,0	15	5	30,0	M6	M10	15	136-302-010
12B-2	8	86,2	44	55	49,8	36	55,5	15	5	30,0	M6	M10	15	136-402-008
16B-2	8	146,4	80	75	66,4	48	90,7	30	10	49,1	M10x1	M16	24	136-502-008
20B-2	8	146,4	80	90	83,0	59	90,7	30	10	49,1	M10x1	M16	24	136-602-008
24B-2	10	166,4	100	138	123,3	93	90,7	50	10	49,1	M10x1	M16	24	136-702-010
28B-2	8	196,4	130	140	116,2	81	95,7	70	10	49,1	M10x1	M16	24	136-802-008
32B-2	8	196,4	130	150	132,8	93	95,7	70	10	49,1	M10x1	M16	24	136-902-008

PU-Lubrication Sprocket duplex - angled axis and spring steel

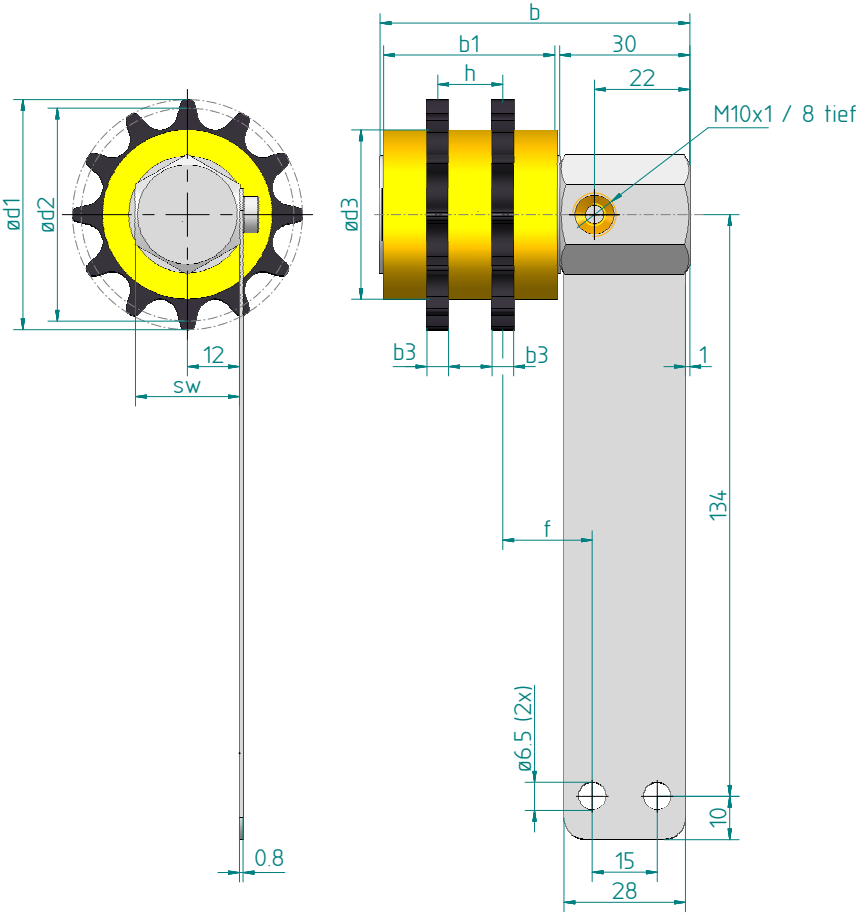

Description:
PU-Lubrication Sprocket for duplex-roller chain;
mounted on angled axis;
with spring steel;
plain bearings;

Material:
Sprocket: PA;
axis: Steel nickel-plated;
Roll: PU-foam;

mounting position:
arbitrary

Spring steel and screws enclosed loose.

DIN 8187-1/ 8188-1	z	b	b1	d1	d2	d3	f	h	b3	sw	part-no.
08B-2	12	71,4	40	53	49,1	39	20,7	15	5	24	136-202-112
10B-2	10	71,4	40	55	51,4	39	20,7	15	5	24	136-302-110
12B-2	8	76,4	44	55	49,8	36	23,2	15	5	24	136-402-108

PU-Lubrication Sprocket duplex - angled axis and double spring steel

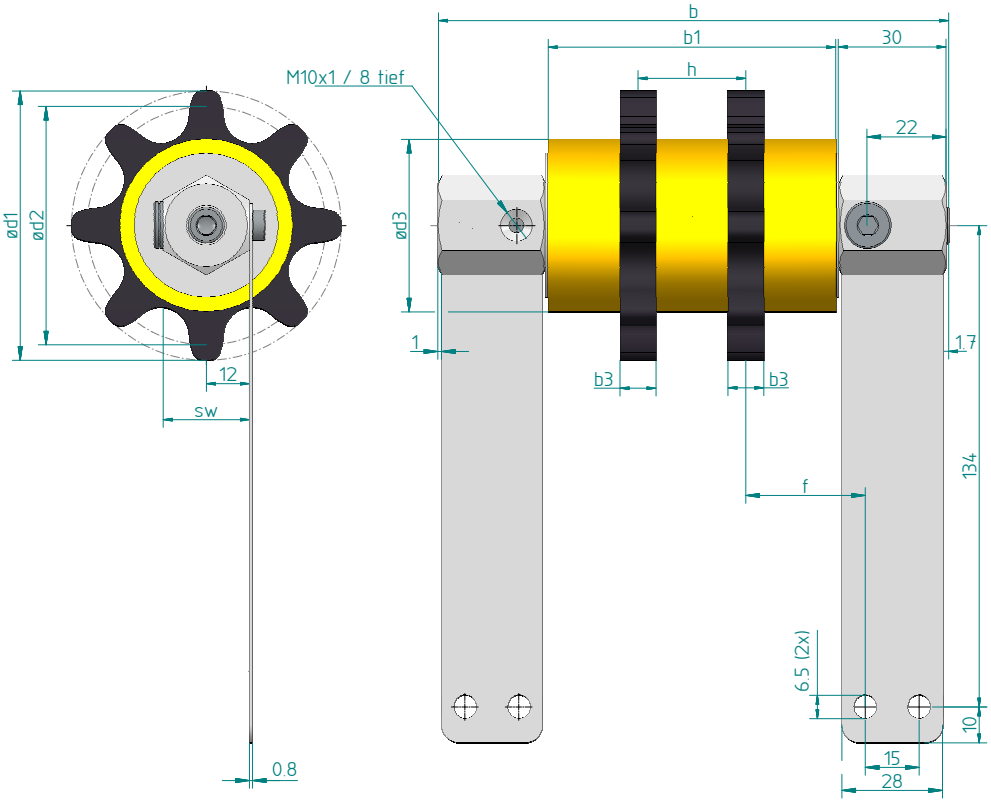

Description:
PU-Lubrication Sprocket for duplex-roller chain;
mounted on angled axis;
with spring steel;
plain bearings;

Material:
Sprocket: PA;
axis: Steel nickel-plated;
Roll: PU-foam;

mounting position:
arbitrary

Spring steel and screws enclosed loose.

DIN 8187-1/ 8188-1	z	b	b1	d1	d2	d3	f	h	b3	sw	part-no.
16B-2	8	142,1	80	75	66,4	48	33,2	30	10	24	136-502-108
20B-2	8	142,1	80	90	83,0	59	33,2	30	10	24	136-602-108
24B-2	10	162,1	100	138	123,3	93	33,2	50	10	24	136-702-110
28B-2	8	192,1	130	140	116,2	81	38,2	70	10	24	136-802-108
32B-2	8	192,1	130	150	132,8	93	38,2	70	10	24	136-902-108

PU-Lubrication Sprocket triplex - angled axis and spring steel

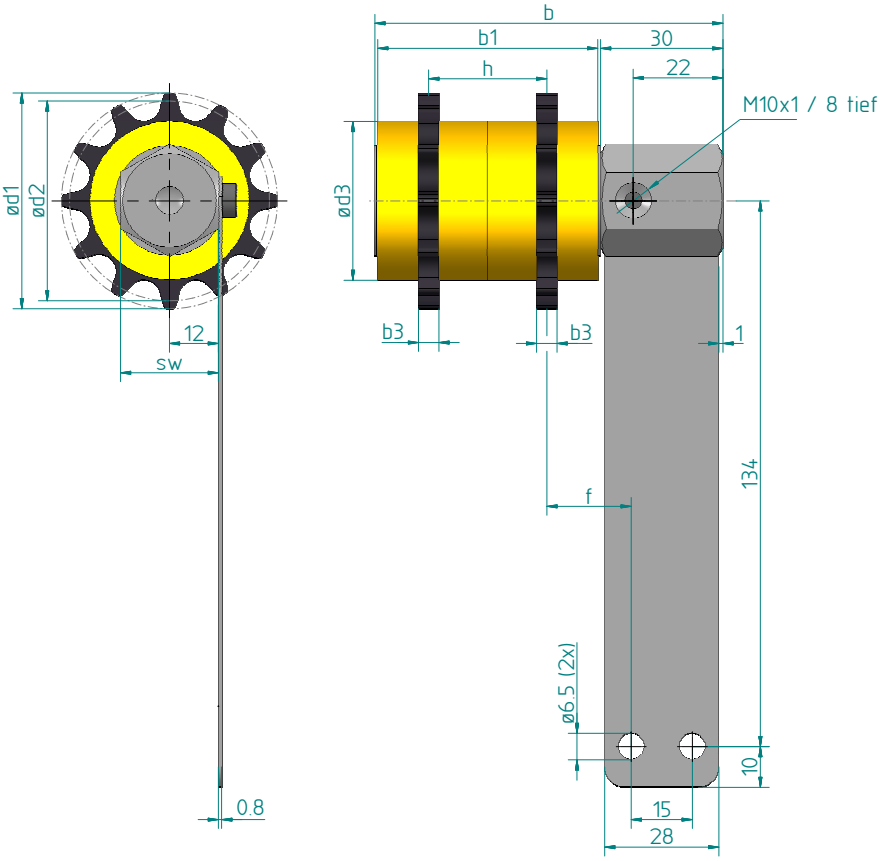

Description:
PU-Lubrication Sprocket for
triplex-roller chain;
mounted on angled axis;
with spring steel;
plain bearings;

Material:
Sprocket: PA;
axis: Steel nickel-plated;
Roll: PU-foam;

mounting position:
horizontal
(vertical mounting position on request)

Spring steel and screws enclosed loose.

DIN 8187-1/ 8188-1	z	b	b1	d1	d2	d3	f	h	b3	sw	part-no.
08B-3	12	85,4	54	53	49,1	39	20,7	29	5	24	136-203-112
10B-3	10	91,4	59	55	51,4	39	23,2	30	5	24	136-303-110

PU-Lubrication Sprocket triplex - angled axis and double spring steel

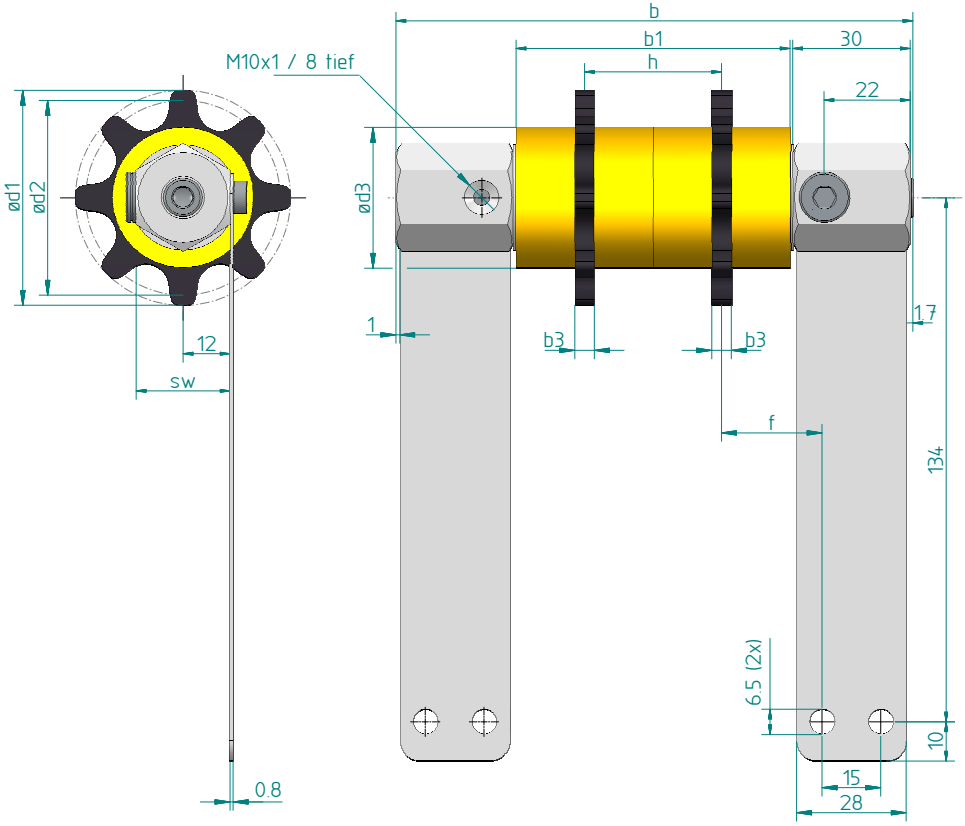

Description:
PU-Lubrication Sprocket for triplex-roller chain;
mounted on angled axis;
with spring steel;
plain bearings;

Material:
Sprocket: PA;
axis: Steel nickel-plated;
Roll: PU-foam;

mounting position:
arbitrary

Spring steel and screws enclosed loose.

DIN 8187-1 / 8188-1	z	b	b1	d1	d2	d3	f	h	b3	sw	part-no.
12B-3	8	132,1	70	55	49,8	36	25,7	35	5	24	136-403-108*
16B-3	8	162,1	100	75	66,4	48	28,2	60	10	24	136-503-108
20B-3	8	182,1	120	90	83,0	59	33,2	70	10	24	136-603-108
24B-3	10	212,7	150	138	123,3	93	33,5	100	10	24	136-703-110
28B-3	8	262,7	200	140	116,2	81	43,5	130	10	24	136-803-108
32B-3	8	262,7	200	150	132,8	93	43,5	130	10	24	136-903-108

*only horizontal mounting position possible (vertical mounting position on request)

PU-Lubrication roll

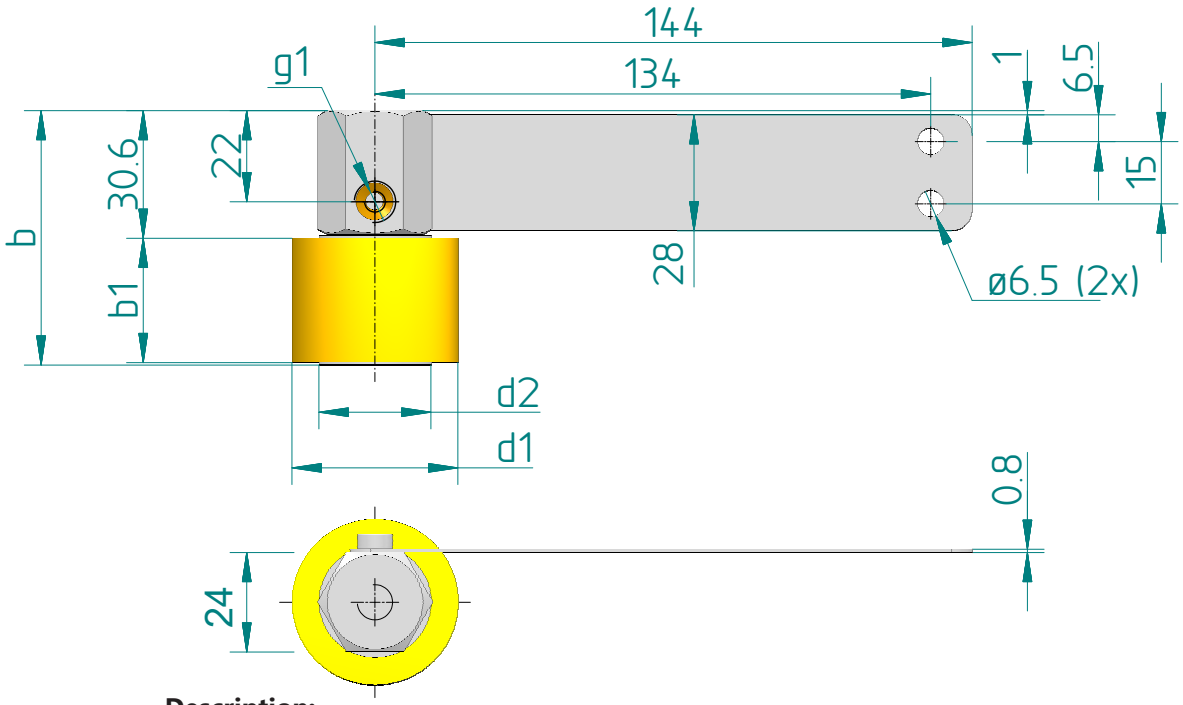

Description:
PU lubrication roll; plain bearings; with one-sided recording;
for radial (angled) lubricant supply;
on spring steel mounted;
oil applications

Material:
Roll: open-cell PU foam;
axis: Steel, nickel-plated;
Spring steel: 1.4310

Mounting position:
horizontal

Single-sided

b1	d1	b	d2	g1	part-no.
20	40	51,4	27	M10x1 10mm	137-020-403
24	40	55,4	27	M10x1 10mm	137-024-403
30	40	61,4	27	M10x1 10mm	137-030-403
40	40	71,4	27	M10x1 10mm	137-040-403
45	40	76,4	27	M10x1 10mm	137-045-403
50	65	81,4	45	M10x1 10mm	137-050-653
60	65	91,4	45	M10x1 10mm	137-060-653

PU-Lubrication roll

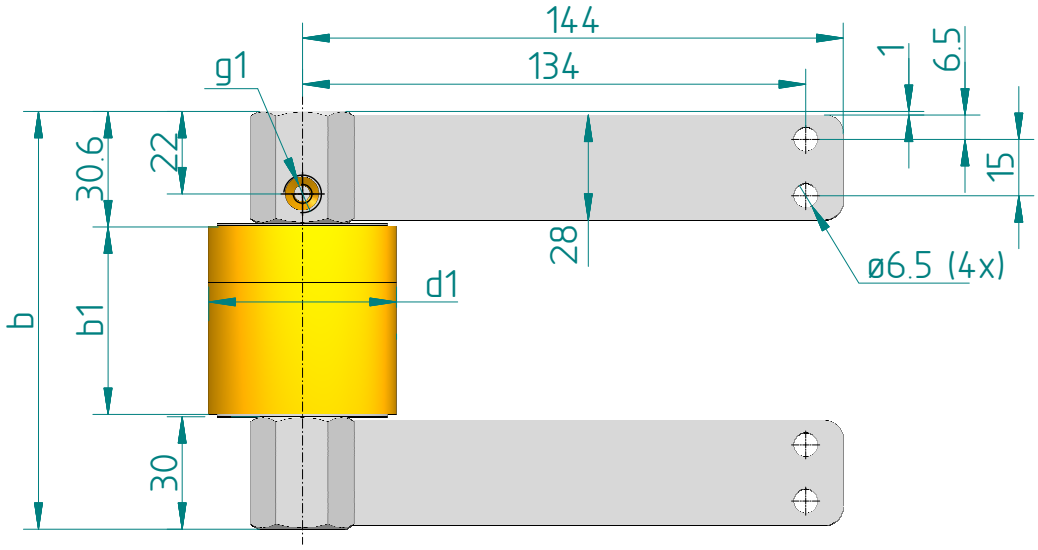

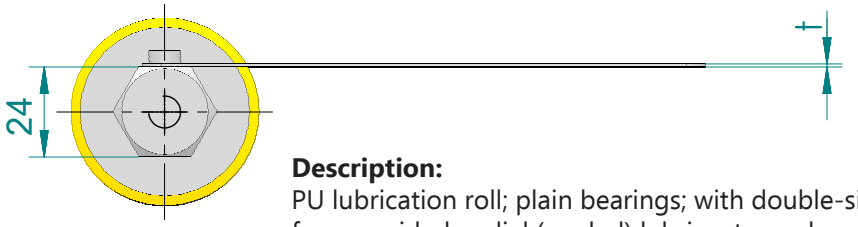

Description:
PU lubrication roll; plain bearings; with double-sided recording;
for one-sided, radial (angled) lubricant supply;
on spring plates mounted;
oil applications

Material:
Roll: open-cell PU foam;
axis: Steel, nickel-plated;
Spring steel: 1.4310

Mounting position:
horizontal

Double-sided

b1	d1	b	g1	t	part-no.
60	65	121,4	M10x1 10mm	0,8	137-060-654
70	65	131,4	M10x1 10mm	0,8	137-070-654
80	65	141,4	M10x1 10mm	0,8	137-080-654
90	65	151,4	M10x1 10mm	0,8	137-090-654

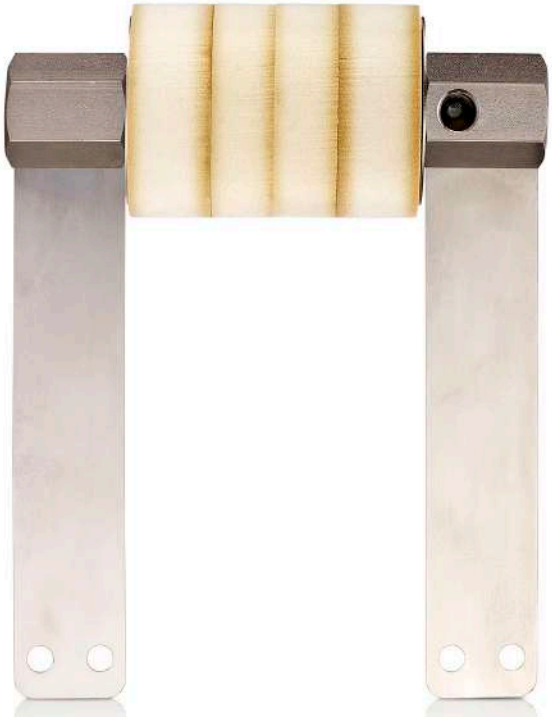

Splitter for oil

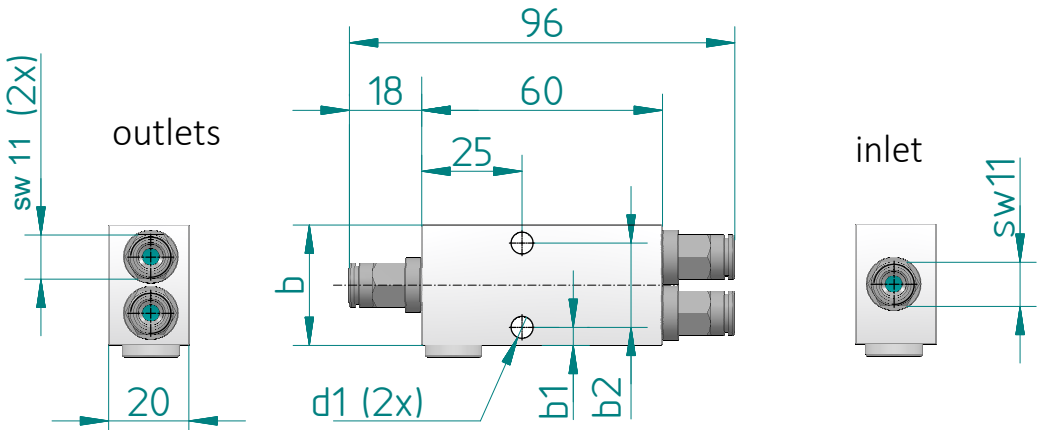

Description:
Passive flow dividers (splitters) to expand FlexxPump;
with tube connectors for tube 6

Material:
Splitter: aluminum;
connectors: brass, nickel-plated

outlets	inlet	tube	outlets	tube	b	b1	b2	d1	part-no.
2	straight	6	straight	6	30	4,5	21	5,5	234-005-006
3	straight	6	straight	6	48	18	15	6,5	234-005-007
4	straight	6	straight	6	60	17,5	25	6,5	234-005-008

Lubricant distribution

The splitters are to be connected as close as possible to the outlets of the FlexxPump.

The splitters preferably work in conjunction with the piston pumps in the series FlexxPump.

Only one splitter can be installed at each outlet of the FlexxPump.
Depending on the type of FlexxPump, the splitters can be connected as follows:

- FlexxPump 125 max. 1 splitter with 4 outlets
- FlexxPump 500 max. 4 splitters with 4 outlets each
- FlexxPump 2000 max. 10 splitters with 4 outlets each

It is not possible to operate two or more splitters on one pump outlet
(no cascade of distributors)!

It is important to ensure that the tube lengths after Distributor are the same.

The splitters can be used for oils from 60 cSt, preferably with oils from the DLS range.

The splitters cannot be used when using lubricants with a solid content.

Operating temperature range: +10 ° C... +60 ° C

Splitters are vented with oil with H1 approval.

Progressiv distributor

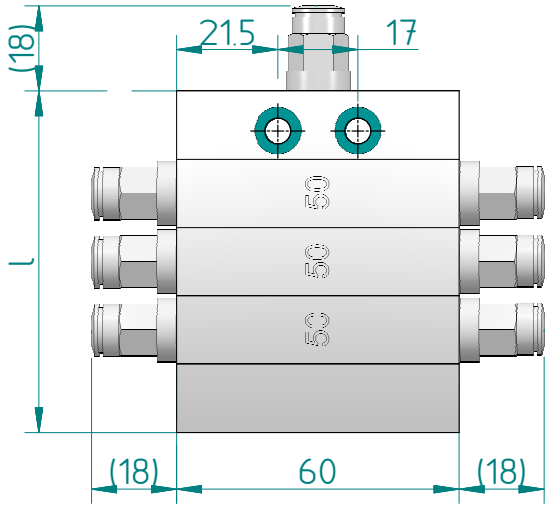

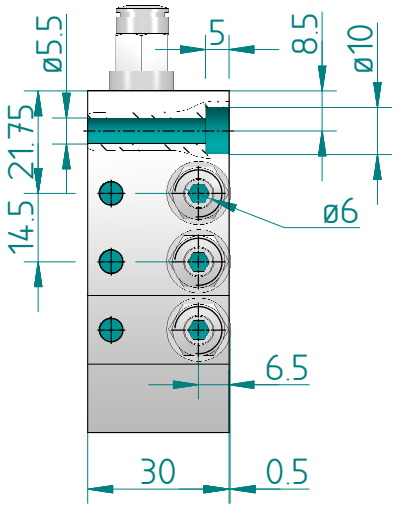

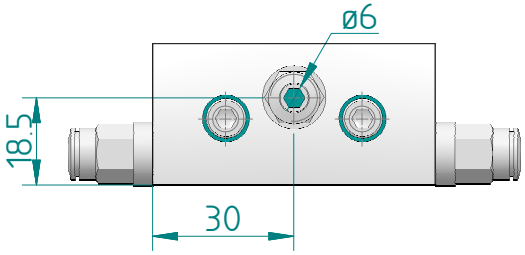

Description:
DLS progressiv distributor in lightweight solution are built in a variable disk construction for all types of FlexxPump series.
Adjustment is based on oil lubricants.
6-way slice distributor with 3 dosing elements;
straight tube connection for tube 6mm on inlet and outlets.

Material:
Distributor: aluminum;
Connections: brass, nickel-plated

Lubricant distribution

outlets	inlet	tube	outlets	tube	l	part-no.
2	straight	6	straight	6	72,5	238-000-002
3	straight	6	straight	6	72,5	238-000-003
4	straight	6	straight	6	72,5	238-000-004
5	straight	6	straight	6	72,5	238-000-005
6	straight	6	straight	6	72,5	238-000-006
7	straight	6	straight	6	87,0	238-000-007
8	straight	6	straight	6	87,0	238-000-008
9	straight	6	straight	6	101,5	238-000-009
10	straight	6	straight	6	101,5	238-000-010

Standard design:
- Modular disk constructed distributor in lightweight aluminum construction with special coordination with FlexxPump 125/500/2000 for DLS oils
- 2 to 10 outlets per distributor possible
- Tube connection on inlet and outlets straight for tube 6
- Maximum pressure 100 bar
- Dosing volume 50 mm^3

Special design (on request):
- Tube connection in various designs, straight / right-angled
- Different tube diameter,
- 4/6/8 mm on inlet or outlet
- Establishing the locations of the outlets
- Different delivery amounts per outlet through disc elements with different dosing volume (25/50/100 mm^3)

Good to know:
- Only suitable DLS lubricant can be used!
- Operating temperature range: -20 ° C... +60 ° C (depending on the lubricant used)
- In connection with FlexxPump 125/500/2000 cannot be used in series (no main and secondary distributors / cascading)
- Vented with oil with H1 approval

Progressiv distributor with circulation monitoring

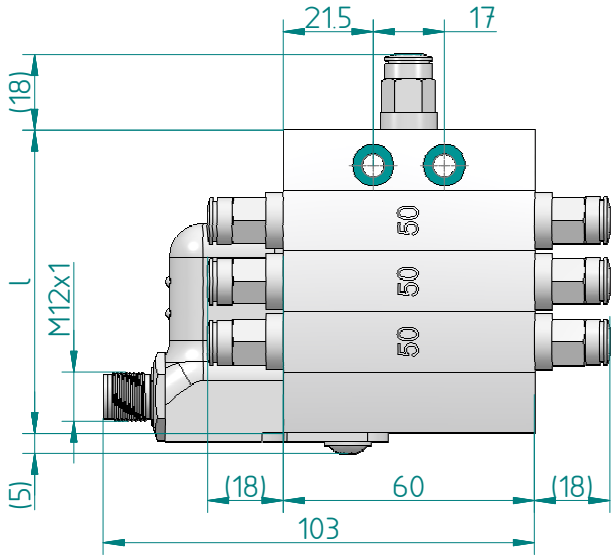

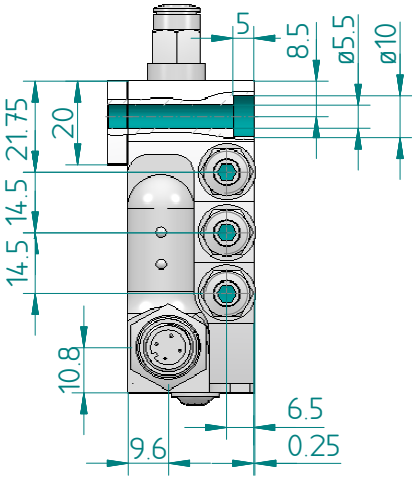

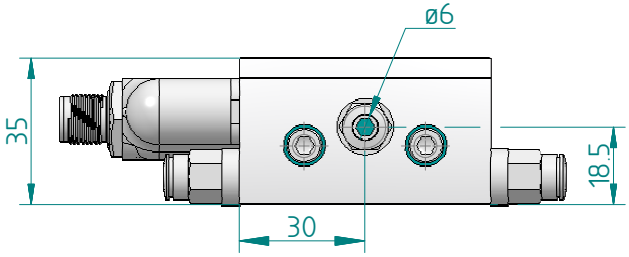

Description:
DLS progressiv distributor in lightweight solution are built in a variable disk construction for all types of FlexxPump series. Alignment is based on oil lubricants.
6-way slice distributor with 3 dosing elements; straight tube connection for tube 6mm on inlet and outlets.

Material:
Distributor: aluminum
Connections: brass, nickel-plated

Lubricant distribution

outlets	inlet	tube	outlets	tube	l	part-no.
2	straight	6	straight	6	72,5	238-010-002
3	straight	6	straight	6	72,5	238-010-003
4	straight	6	straight	6	72,5	238-010-004
5	straight	6	straight	6	72,5	238-010-005
6	straight	6	straight	6	72,5	238-010-006
7	straight	6	straight	6	87,0	238-010-007
8	straight	6	straight	6	87,0	238-010-008
9	straight	6	straight	6	101,5	238-010-009
10	straight	6	straight	6	101,5	238-010-010

Standard design:
- Modular disk constructed distributor in lightweight aluminum construction with special coordination with FlexxPump 125/500/2000 for DLS oils
- With circulation monitoring to control the correct operation of all outlets
- 2 to 10 outlets per distributor possible
- Tube connection on inlet and outlets straight for tube 6
- Maximum pressure 100 bar
- Dosing volume 50 mm^3

Special design (on request):
- Tube connection in various designs, straight / right-angled
- Different tube diameter,
- 4/6/8 mm on inlet or outlet
- Establishing the locations of the outlets
- Different delivery amounts per outlet through disc elements with different dosing volume (25/50/100 mm^3)

Good to know:
- Only suitable DLS lubricant can be used!
- Operating temperature range: -20 ° C... +60 ° C (depending on the lubricant used)
- In connection with FlexxPump 125/500/2000 cannot be used in series (no main and secondary distributors / cascading)
- Vented with oil with H1 approval

Tube connector with non-return valve

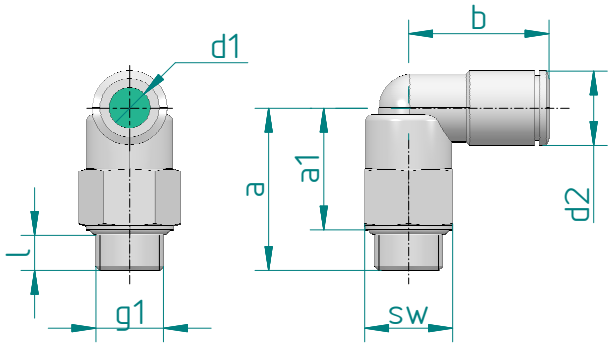

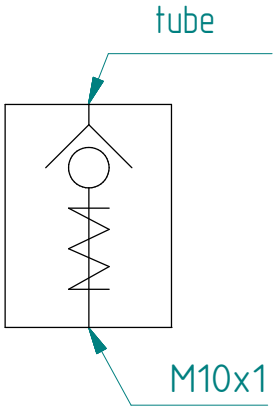

Description:
Tube connector with integrated non-return valve; right-angled; 360° rotatable;

Material:
brass, nickel-plated;
Seal: NBR

d1	g1	d2	a	a1	b	l	sw	part-no.
4	M10x1	9	24	18	20	5,5	13	134-001-200
6	M10x1	11	24	18	20,5	5,5	13	134-001-201
8	M10x1	13	25	19	23,5	5,5	13	134-001-202

Tube

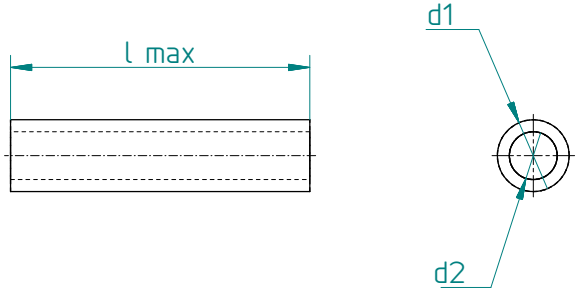

Description:
Tube pre-filled with lubricant; (only OE1)

Material:
PA; black ; transparent only for oil

lubricant	d1	d2	l max.	good to know	part-no.
OE1	6	4	15 m	tube, black; by meter	134-003-051
empty	6	3	50 m	tube, transparent; by meter	134-004-002

accessories	part-no.
Tube cutter	134-002-002

Oil OE1
Creeping oil for chains

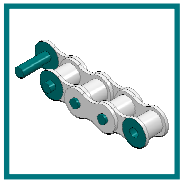

Oil OE1

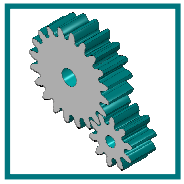

- Highly viscous, very creeping adhesive lubricant
- Synthetic white oil
- Pressure and adhesive lubricant with EP and boundary lubricating properties
- With H1 approval

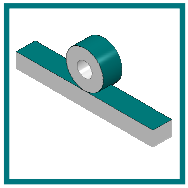

Commitment:
- Lubrication of chains and plain bearings
- Pumpability in lubrication systems: +5 ° C ... +65 ° C

Operating temperature range: -10 ° C ... +80 ° C

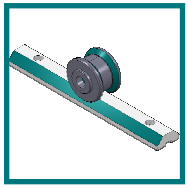

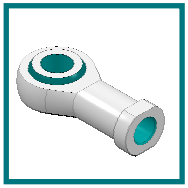

description	lubricant	volume	usage	part-no.
cartridge for FlexxPump 125	OE1	125 cc	FlexxPump 125	000-201-101
cartridge for FlexxPump 125	OE1	250 cc	FlexxPump 125	000-201-102
cartridge for FlexxPump 250	OE1	250 cc	FlexxPump 250	000-201-103
cartridge for FlexxPump 400	OE1	400 cc	FlexxPump 400	000-201-105
canister	OE1	5 liter		000-201-503

Oil OE3
Chain oil with H1 approval

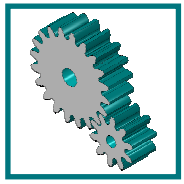

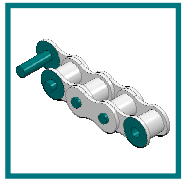

Oil OE3

- Paraffin oil based lubricant
- H1 approval
- Very good wear and corrosion protection

Commitment:
- Lubrication of chains and plain bearings
- Pumpability in lubrication systems: + 5 ° C ... + 80 ° C

Operating temperature range: -10 ° C ... +120 ° C

description	lubricant	volume	part-no.
canister	OE3	5 liter	000-201-505
canister	OE3	20 liter	000-201-507

Bracket for FlexxPump 125 & Distributor

Description:
Universal stainless steel bracket for all types FlexxPump 125;
for easy assembly on rear structure;

Description:
Stainless steel brackets for all types FlexxPump 125; for Progressive Distributor (oil); different designs;
Progressive distributor not included;

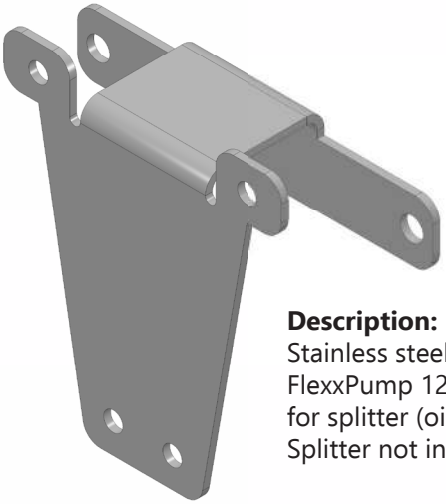

Description:
Stainless steel brackets for all types FlexxPump 125;
for splitter (oil); different designs;
Splitter not included;

Brackets for FlexxPump 500

Description:
Accessory bracket in stainless steel for all types FlexxPump 500;

With screws to attach the FlexxPump 500;

Different designs;

Solid execution;

Brackets for FlexxPump 125 & Splitter

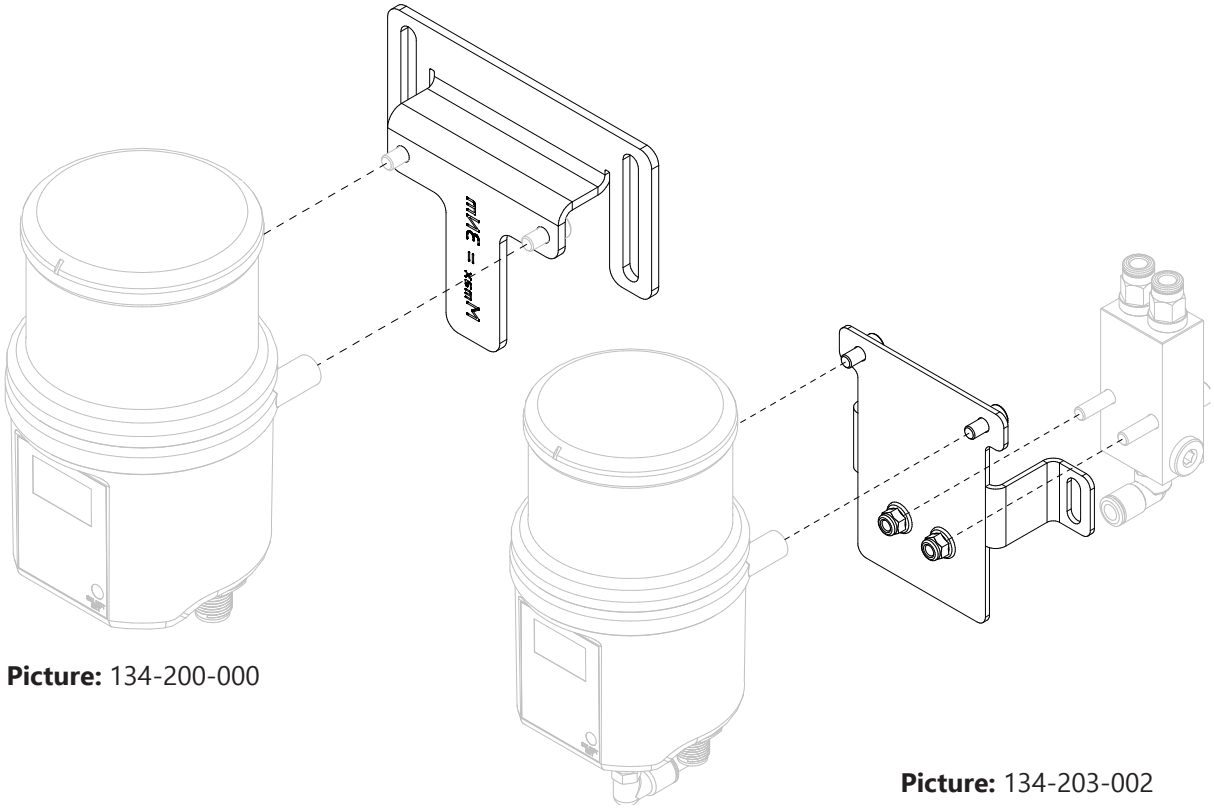

Picture: 134-200-000

Picture: 134-203-002

description	part-no.
brackets (stainless steel) for all types FlexxPump 125	134-200-000

description	type splitter	position splitter	part-no.
brackets (stainless steel) for FlexxPump 125 and 2-way Splitter	2-fach	behind	134-203-002
brackets (stainless steel) for FlexxPump 125 and 3-way Splitter	3-fach		134-203-003
brackets (stainless steel) for FlexxPump 125 and 4-way Splitter	4-fach		134-203-004

Brackets for FlexxPump 125 & Progressiv distributor

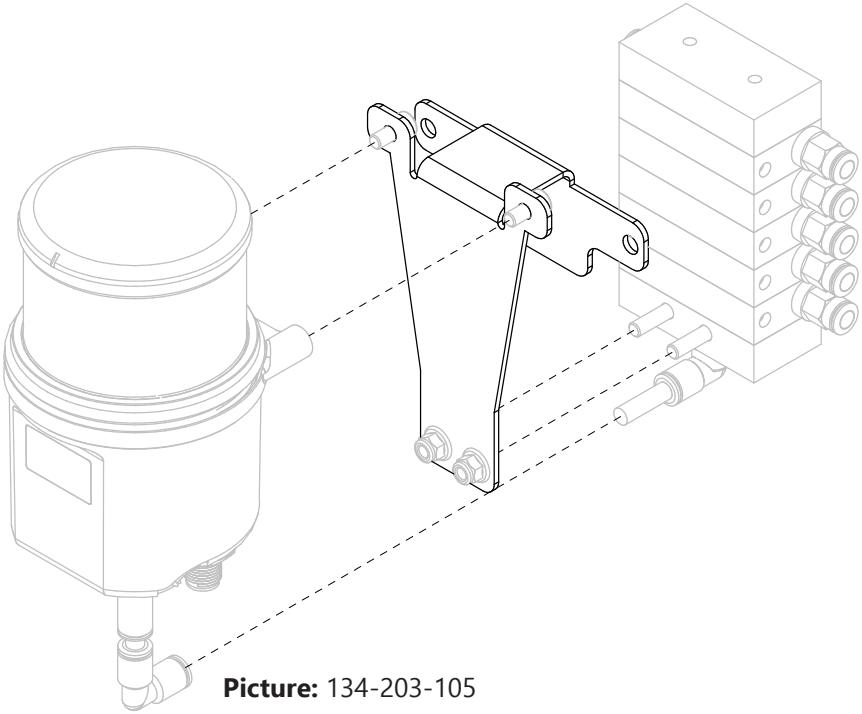

Picture: 134-203-105

description	type PGV	position	part-no.
brackets (stainless steel) for FlexxPump 125 and PGV 2 outlets	2x (138-000-002)	behind	134-203-102
brackets (stainless steel) for FlexxPump 125 and PGV 3 outlets	3x (134-000-003)		134-203-103
brackets (stainless steel) for FlexxPump 125 and PGV 4 outlets	4x (134-000-004)		134-203-104
brackets (stainless steel) for FlexxPump 125 and PGV 5 outlets	5x (134-000-005)		134-203-105
brackets (stainless steel) for FlexxPump 125 and PGV 6 outlets	6x (134-000-006)		134-203-106
brackets (stainless steel) for FlexxPump 125 and PGV 7 outlets	7x (134-000-007)		134-203-107
brackets (stainless steel) for FlexxPump 125 and PGV 8 outlets	8x (134-000-008)		134-203-108
brackets (stainless steel) for FlexxPump 125 and PGV 9 outlets	9x (134-000-009)		134-203-109
brackets (stainless steel) for FlexxPump 125 and PGV 10 outlets	10x (134-000-010)		134-203-110

Brackets for FlexxPump 500

Typ 1

134-100-001

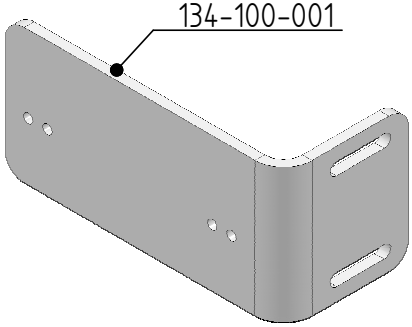

Typ 2

134-100-002

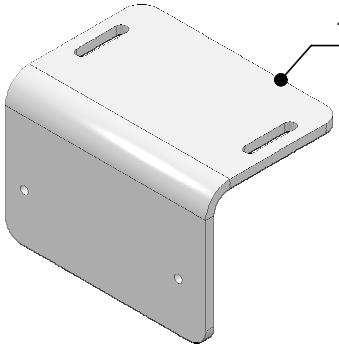

Typ 3

134-100-003

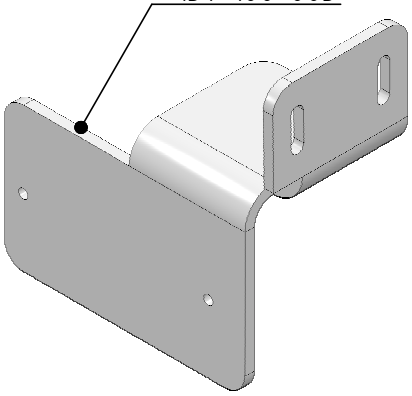

Typ 4

134-100-004

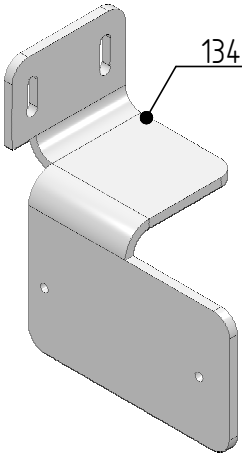

Typ 5

134-100-005

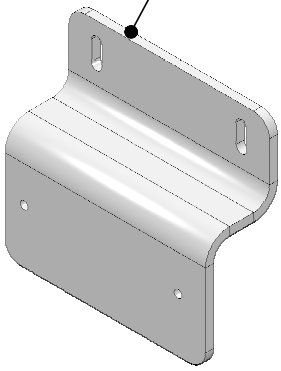

Brackets for FlexxPump 500

description	part-no.
accessory bracket type 1; for FlexxPump 500	134-100-001
accessory bracket type 2; for FlexxPump 500	134-100-002
accessory bracket type 3; for FlexxPump 500	134-100-003
accessory bracket type 4; for FlexxPump 500	134-100-004
accessory bracket type 5; for FlexxPump 500	134-100-005

Notice:
FlexxPump 500 not included;
See dimension sheet for dimensions

Brackets for FlexxPump 500 are identical to Brackets for FlexxPump 400

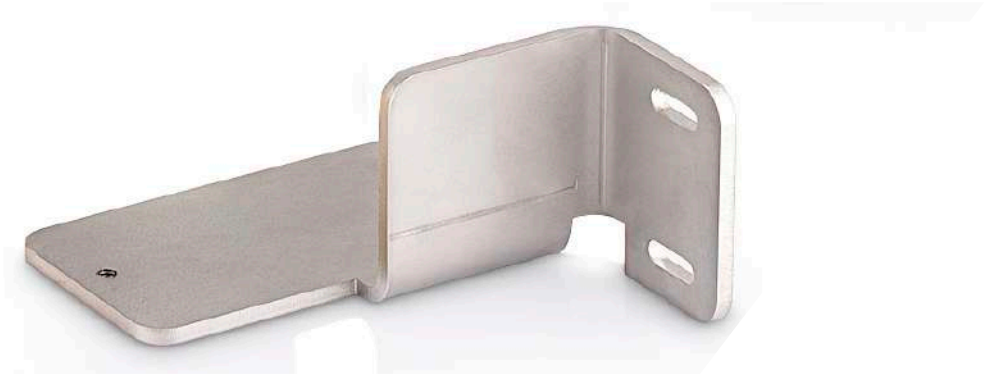

Lubrication charts
Chain lubrication

Lubricant (oil):
can be refilled

Lubricant dispenser
- for 2 different lubrication amounts;
- pulse-controlled;
- max. pressure 70 bar;
- dosing volume min. 0,15 cc

SPS

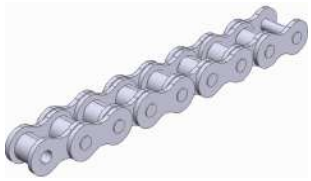

High pressure tube:
- transparent;
- 6x3;
- suitable for drag chains;
- smallest bending radius 30 mm;

Distributor:
Splitter (Quantity distributor)

Tube lengths:
- till Distributor: 30 m
- after Distributor: 10 m
- without Distributor: 40 m

PU-Lubrication roll for duplex chain:
- PU-foam
- wear-resistant
- Operating temperature -30 °C ... +120 °C
- incl. double Spring steel

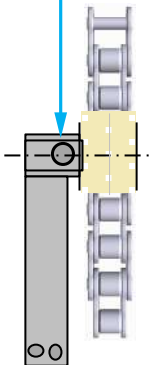

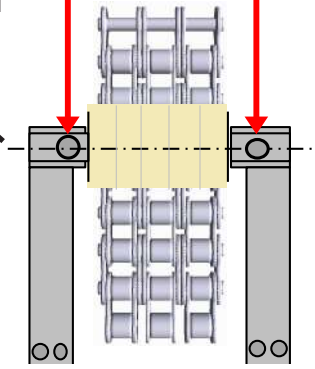

PU-Lubrication roll for simplex chain:
- PU-foam
- wear-resistant
- Operating temperature -30 °C ... +120 °C
- incl. Spring steel

Lubrication charts
Hollow pin chain

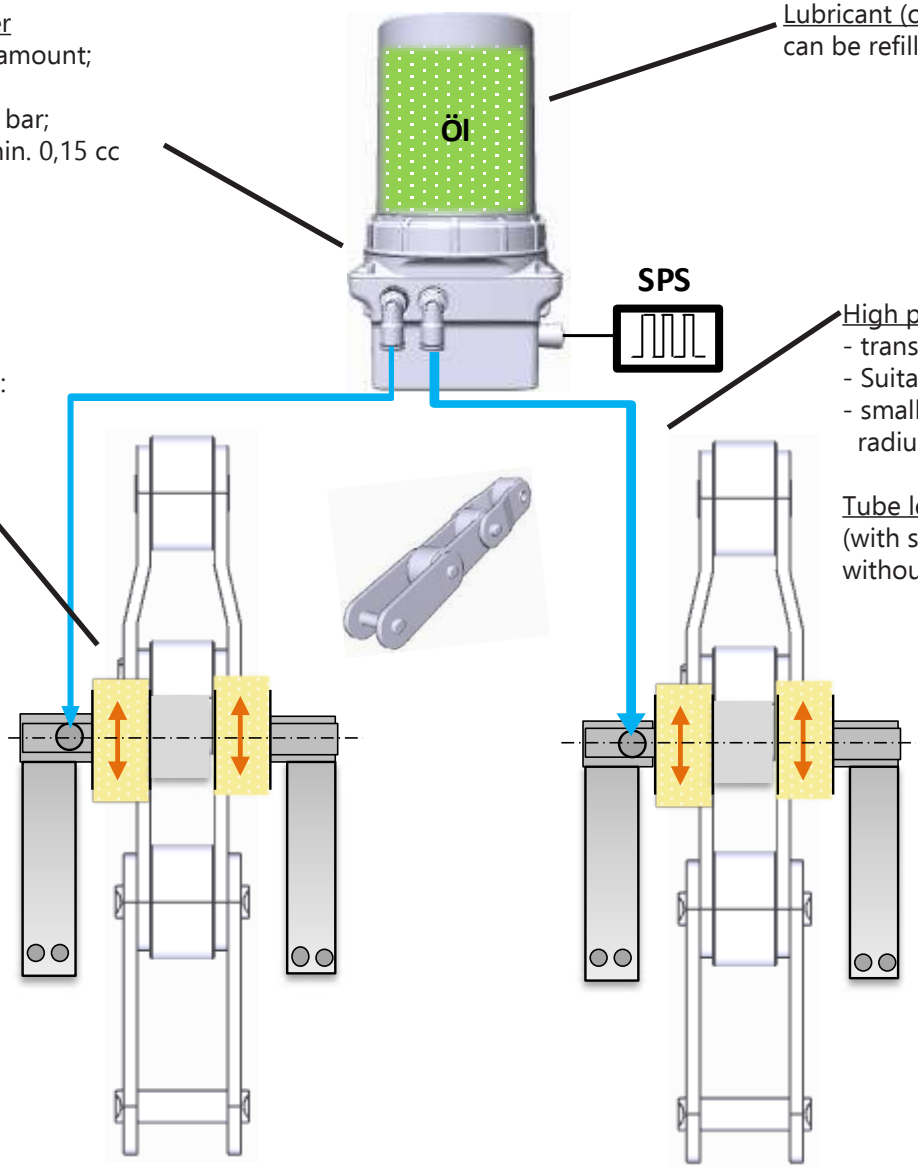

Lubricant dispenser
- for 1 lubrication amount;
- pulse-controlled;
- max. pressure 70 bar;
- dosing volume min. 0,15 cc

Lubricant (oil):
can be refilled

PU-Lubrication roll
for hollow pin chain:
- PU-foam
- wear-resistant
- Operating temperature -30 °C ... +120 °C
- incl. double Spring steel

High pressure tube:
- transparent; 6x3;
- Suitable for drag chains;
- smallest bending radius 30 mm

Tube lengths:
(with suitable oils)
without Distributor 40 m

Partner

AUSTRIA

Graessner GmbH
Hirschstettner Str. 19/O/B0103
1220 Wien

www.graessner.at

FRANCE

REDEX-ANDANTEX S.A.
BP79 Zone Industrielle
45210 Ferrieres

www.redex-andantex.com

ENGLAND

WMH Transmissions Ltd.
2 Centurion Way | Centurion Park
Tamworth/Staffs B77 5PN

www.wmh-trans.co.uk

NETHERLANDS & BELGIUM

Vansichen Lineairtechniek bvba
Herkenrodesingel 4 bus 3
3500 Hasselt

www.vansichen.be

SPAIN

GAMB S.L.
Rosa de Luxemburg 14-3A
08960 Sant Just Desvern
Barcelona

www.gamb.com.es

FINLAND / NORWAY

Movetec Oy Ab
Suokalliontie 9
01740 Vantaa

www.movetec.fi

CZECH & SLOVAK REPUBLIC

HIWIN s.r.o.
Medkova 888/11
672 00 Brno

www.hiwin.cz

SCHWITZERLAND

Hiwin (Schweiz) GmbH
Eichwiesstraße 20
8645 Jona

www.hiwin.ch

BULGARIA

Pro Chema Ltd.
Complex Chayka, bl. 196
Office 4
9010 Varna

www.prochemaltd.com

INDONESIA

PT. Versada Tiga Sentosa
Ruko Roxy Blok A No. 1
Ji. Mh. Thamrin
Lippo Cikarang
17550 Bekasi

ITALY

WMH Latsch S.r.l.
Marktstraße 47
39021 Laces/Bz.

www.wmh.it

ITALY

Romani Components Srl.
Via De Gasperi 146
20017 Rho Milano

www.romanicomponents.it

Partner

SLOVENIA

Haberkorn Ulmer d.o.o.
Vodovodna ulica 27
2000 Maribor

www.ulmer.si

SWEDEN

JT Pipeline AB
Nätrabölen 221
893 91 Bjästa

www.jtpipeline.se

CHILE

Comercializadora de Productos
Industrials K2 Limitada
Salvador sanfuentes 702
La Florida - Santiago

INDIA

PRO Minerals Private Limited
Village - Basantpur, Thesil;
Jhumpura
758034 Dis. Keonjhar

CHINA

Qingdao Hopf Trading Co.Ltd.
Room2061; No.8 YingFeng Road,
SiFang District
266044 Qingdao

www.hopf-spn.com

TAIWAN

Güdel Lineartec
Hsin-Chu Industrial Park
No.99, An-Chai 8th St.
30352 Hu-Ko, Hsin-Chu

www.gudel.com

JAPAN

S & F Inc.
2-1-13 Higashikamata
Ohta-Ku
Tokyo 144-0031

www.sandfinc.co.jp

KOREA

Yejoon MTS
#508, Mecha Zone, SK Techo Park
77-1; Seongsan-Do
641-465 Changwon-City

AUSTRALIA

Industrial Dynamics Pty. Ltd.
36 Taunton Drive, Cheltenham
3192 Melbourne

www.industrialdynamics.com.au

USA

Andantex USA, Inc.
1705 Valley Road
NJ 07712 Wanamassa

www.andantex.com

MEXICO

Interlub, S.A. de C.V.
Lateral Sur Periférico Norte 559
Parque Industrial Belenes Norte
45150 Guadalajara, Jalisco

www.interlub.com

BRAZIL

Clisol Products LTDA. (MATRIZ)
Avenida do Algodao 316
Loteamento Industrial Salto Grande
13.474-780 Americana-SP

www.clisol.com.br

Triebstockzahnrad Modul 30
Z=8
b=570